LOW VOLTAGE RIDE THROUGH WITH HIGH CURRENT INJECTION

MOTIVATION – PV IS RELEVANT FOR THE SYSTEM

Relevance of PV is increasing:

> Current situation in Germany: 37 GW PV installed base: 40-50% OF THE LOAD is covered

> Present plan for grid development counts with 50-60 GW RATHER CONSERVATIVE
→ Even with such a scenario a couple of hours with dominating PV supply can be considered

Load profile with distributed generation

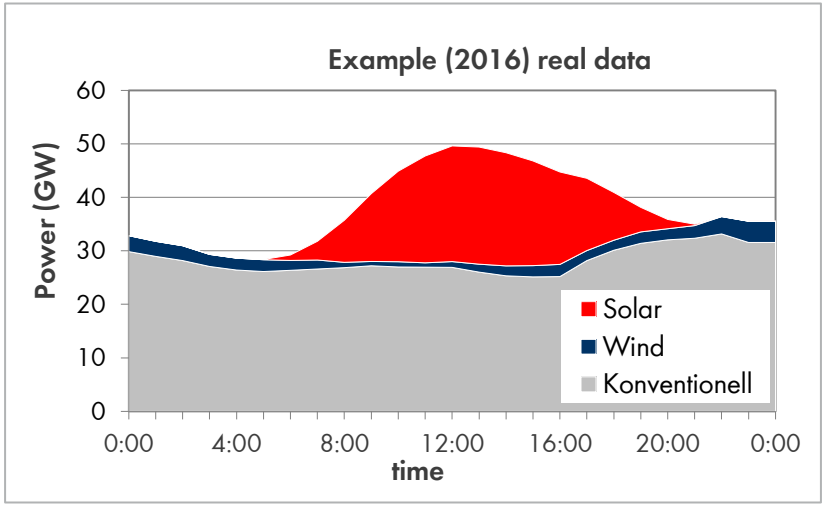

Dates: EEX Transparenzplattform

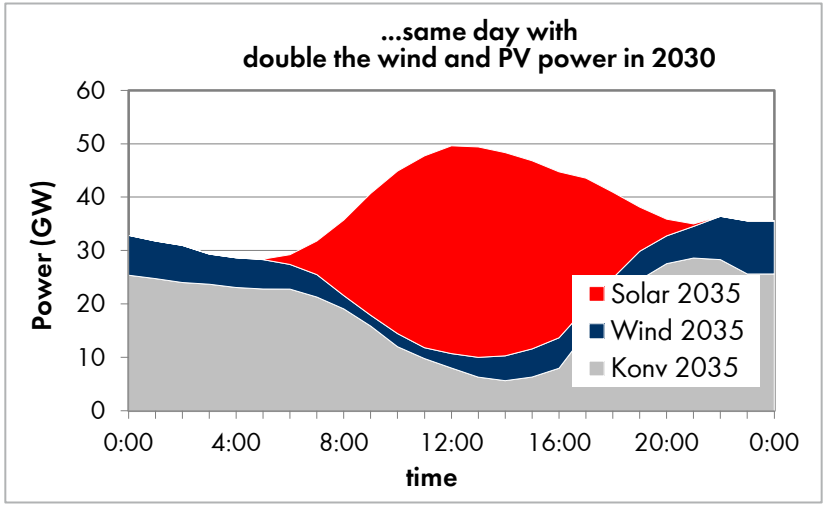

> **In case of PV dominates generation, PV has to generate sufficient ancillary services**

DYNAMIC VOLTAGE CONTROL: ONE PILLAR OF ANCILLARY SERVICES

DENA-Study
„Ancillary services 2030“

> Basic demand for RENEWABLE SOURCES for ancillary services
  > Static voltage support
  > Dynamic voltage support
  > Frequency support in case of over frequency

> Additional developments in the direction of:
  > Control and coordinated operation
  > Active power reserve
  > Black start

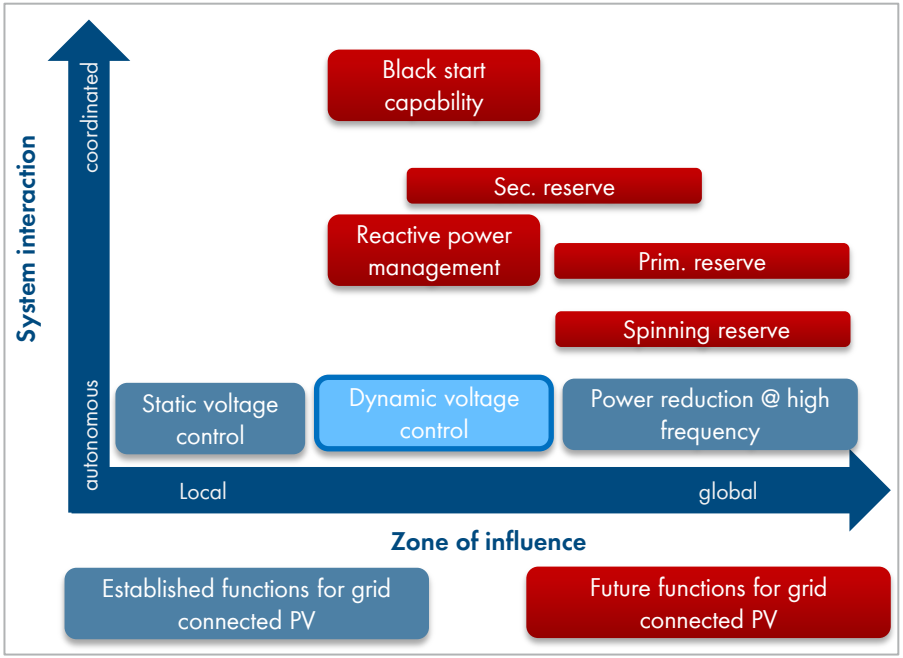

Most important contribution of« 3. GENERATION » PV- Systems

> Aggregated operation of many distributed PV-plants as a tool for **VOLTAGE SUPPORT MANAGEMENT**

> Provision of **ACTIVE POWER RESERVE** for frequency support (e.g. with batteries)

> High system responsibility requires more system interaction and new operation modes

LOW VOLTAGE RIDE THROUGH WITH HIGH CURRENT INJECTION

EXAMPLE FOR STRICT LVRT-REQUIREMENTS

"Renewables Standards", version 1.0, November 2013, Regulatory & Supervisory Bureau – Dubai, UAE

LVRT

The generating unit shall stay connected to the network and continue stable operation when the actual course of each of the three phase-to-phase voltages at the connection point remains within the blue hatched area defined in *Figure 9*.

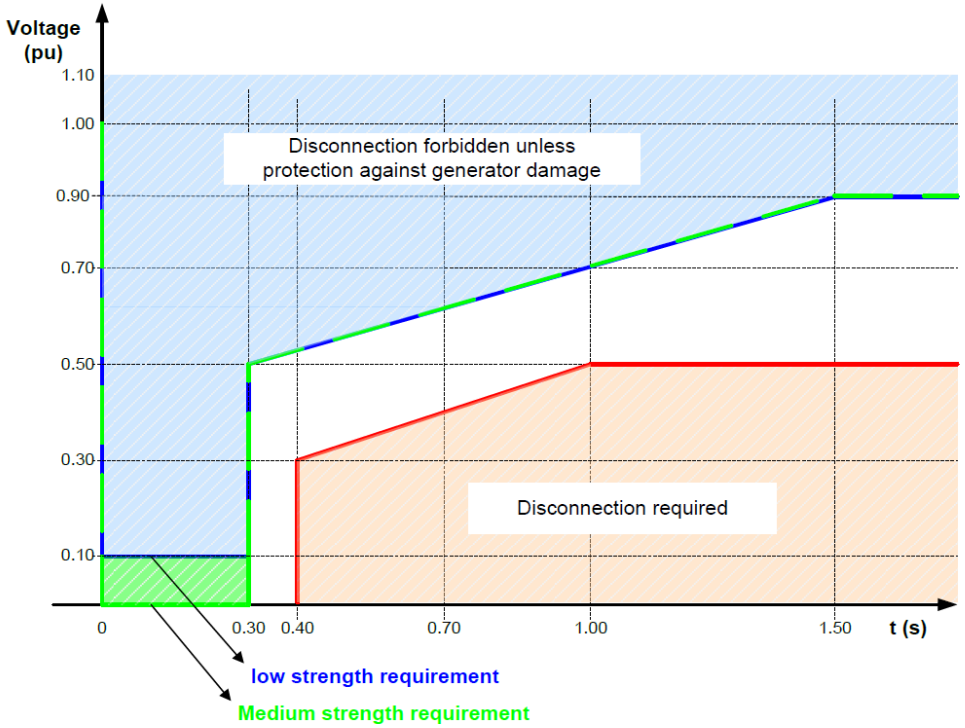

Figure 9: Fault ride through profile.

- **Operation with 10% or even 0% of nominal voltage can be guaranteed with a stable DC Source only. VAr-compensation units cannot be operated during such states.**
- **Please consider, that PV voltage rises to no load voltage during the event**

EXAMPLE FOR STRICT LVRT-REQUIREMENTS

- Below 42% of retained voltage, reactive current shall be supplied not less than 1.2pu.

- Control response time after the fault inception into the network:
  a) Additional reactive current up to 0.6pu must be provided within 20 ms

  b) The full range of additional reactive power must be provided no later than 60 ms.

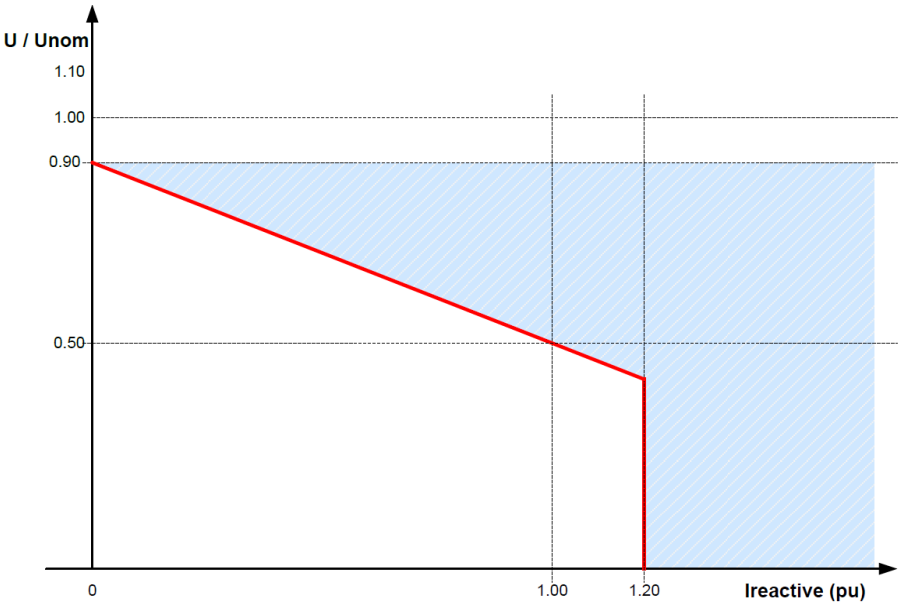

Figure 10: Reactive current injection during fault for non-synchronously connected generating units

Critical requirements:
> Reaction time
> Currents above 100 % of nominal current

INDICATORS FOR FRT CHARACTERIZATION

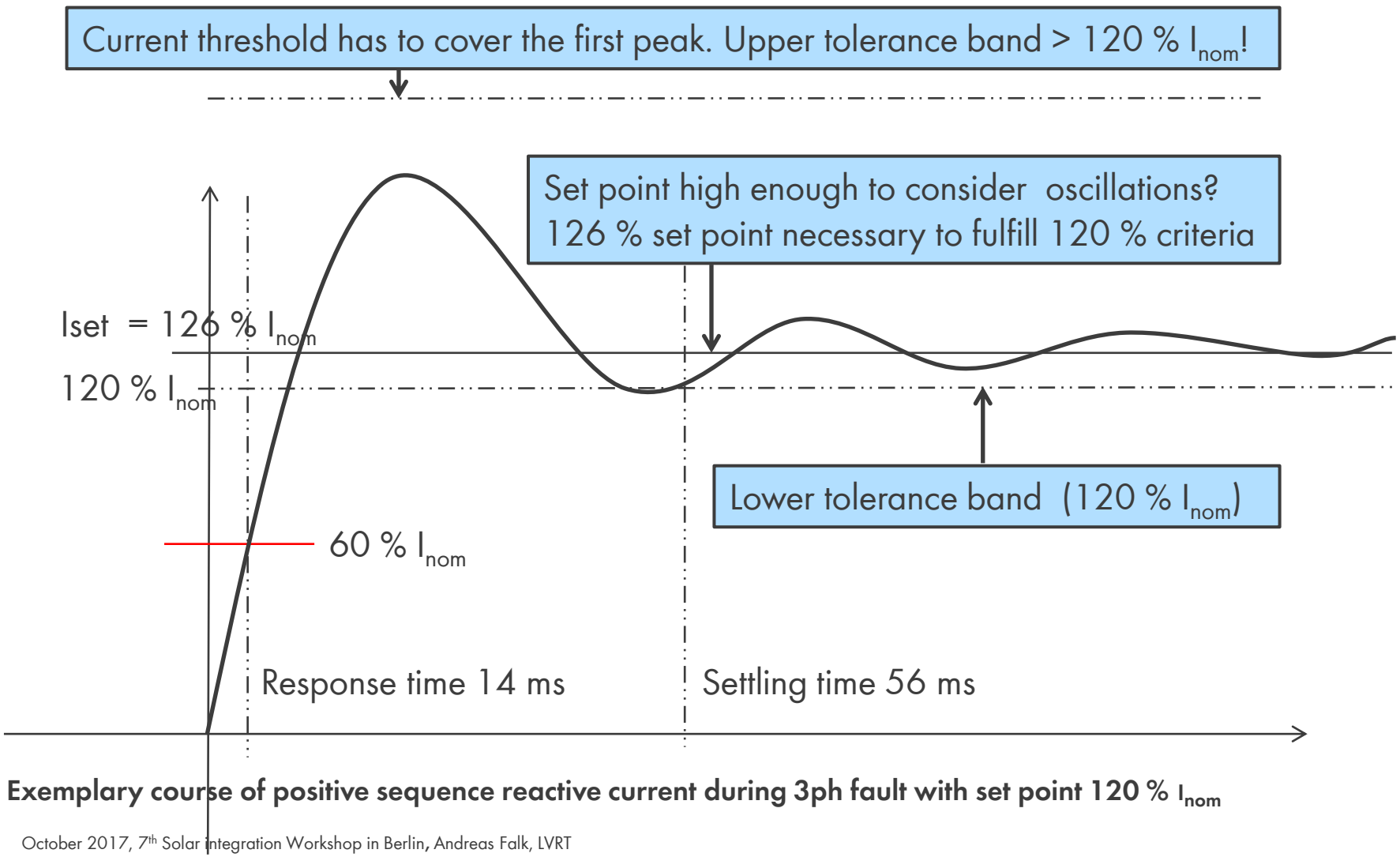

Exemplary course of positive sequence reactive current during 3ph fault with set point 120 % I_{nom}

SETTING OF K-FACTOR REGARDING VDE-AR-N-4110 (GERMAN STANDARD FOR CONNECTION ON MV LEVEL)

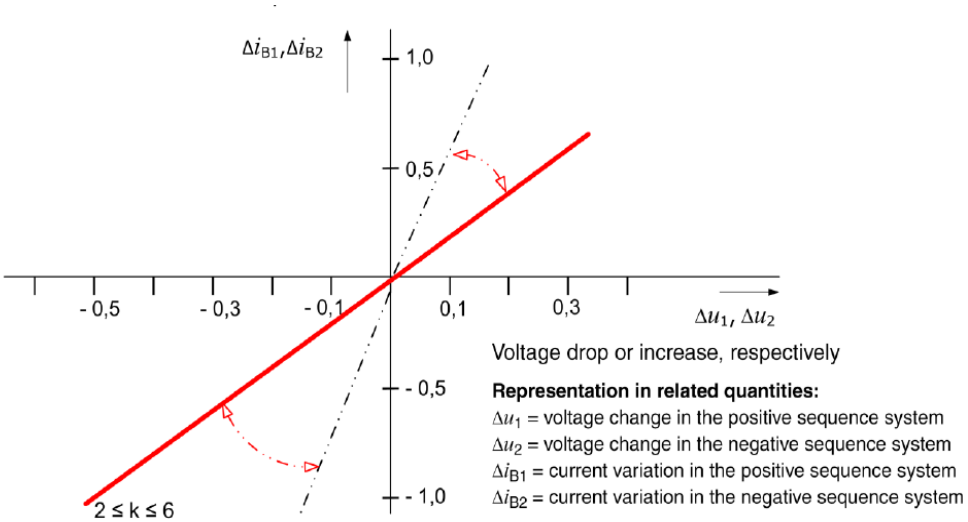

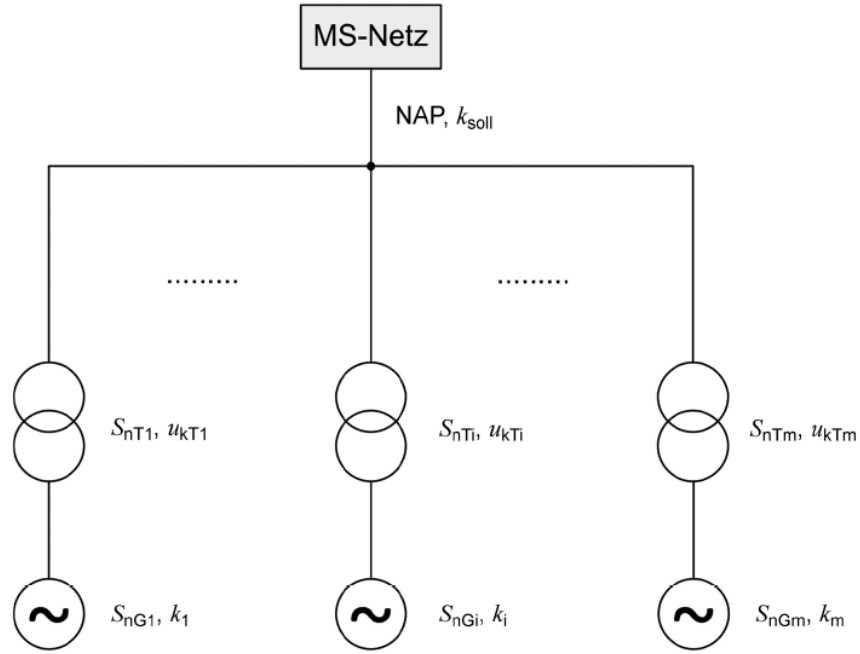

K-Factor

The current contribution during a voltage dip is defined by the gradient of the red curve

$$k_i = \frac{c_K}{\frac{1}{k_{soll}} - u_{kTi} \cdot \frac{S_{nGi}}{S_{nTi}}}$$

See also:
VDE-AR-N 4110, draft, March 2017 (Technical requirements for the connection of customer equipment to MV-grid)

› **Due to the voltage drop at MV transformer the gradient must be adapted to higher values of k-factor**

WHY FRT CURRENTS ABOVE 100 % OF NOMINAL CURRENT

- Voltage support effect is proportional to the current flowing during FRT. Thus A FRT current of **120% to 130% the nominal current** helps to keep the voltage up. (e.g. during switching on of VAr-compensation-units)

- Flexibility of the engineering of protection means for electric installations→ Higher current for triggering protection units (e.g. circuit breaker).

- Support in starting large motors in week grids.

- Premise to install grid supporting or grid building battery inverters. Especially in voltage control mode of battery inverters, a higher current helps to handle critical grid situations.

→ **Experiences of solar inverters can be mapped to battery inverter design**

Higher FRT currents expand the degree of freedom while installing large solar and/ or battery equipment

LOW VOLTAGE RIDE THROUGH WITH HIGH CURRENT INJECTION

RESULTS: FRT TEST SETUP

- Test setup allows to execute several hundred FRT operations during a limited period (e.g. one day) for endurance tests
- Test do not influence the supplying grid

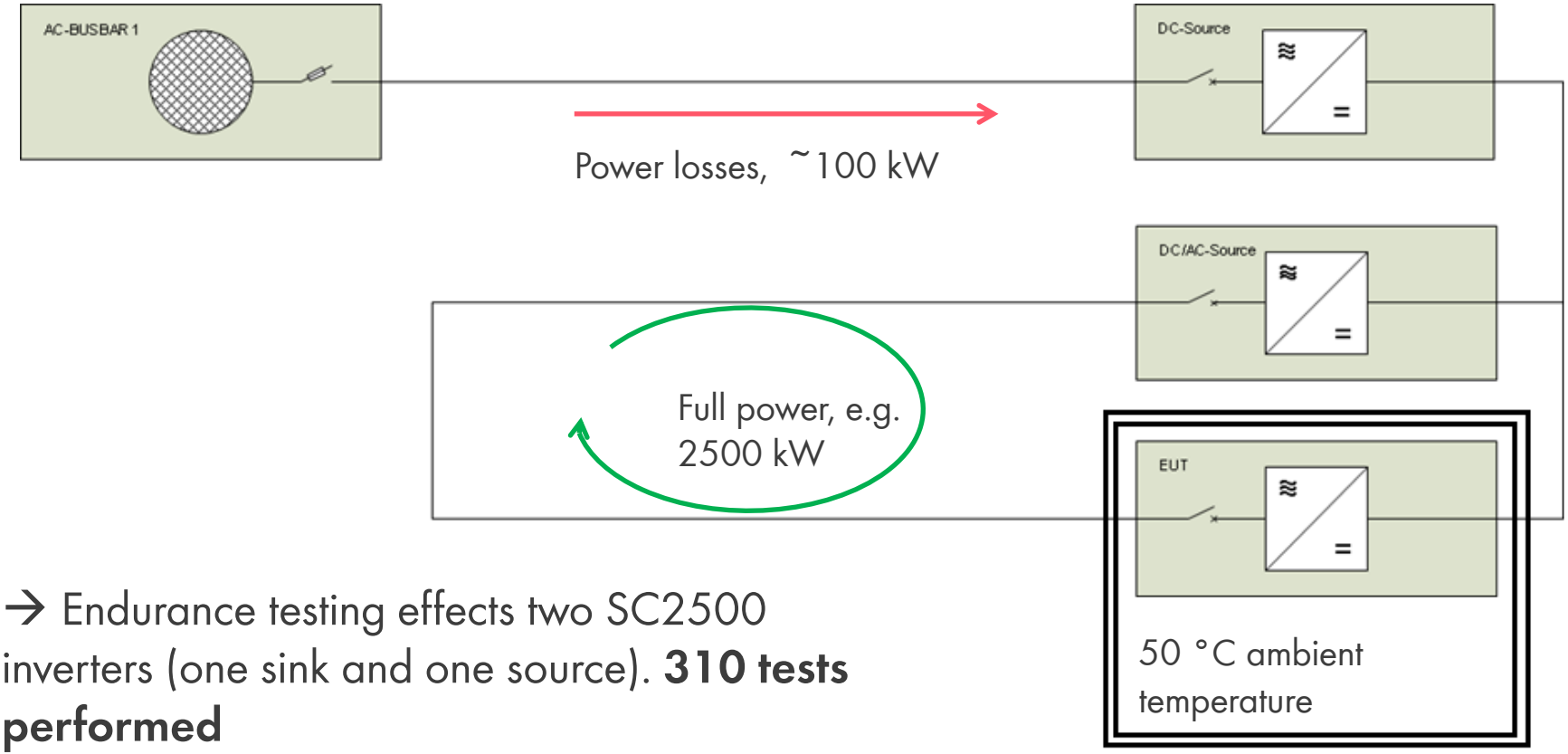

→ Endurance testing effects two SC2500 inverters (one sink and one source). **310 tests performed**

BEHAVIOR DURING A THREE PHASE VOLTAGE DIP

3ph fault to 35 %Un @ 2.2 MW, 50 °C, 3300A set point, 400 ms voltage dip

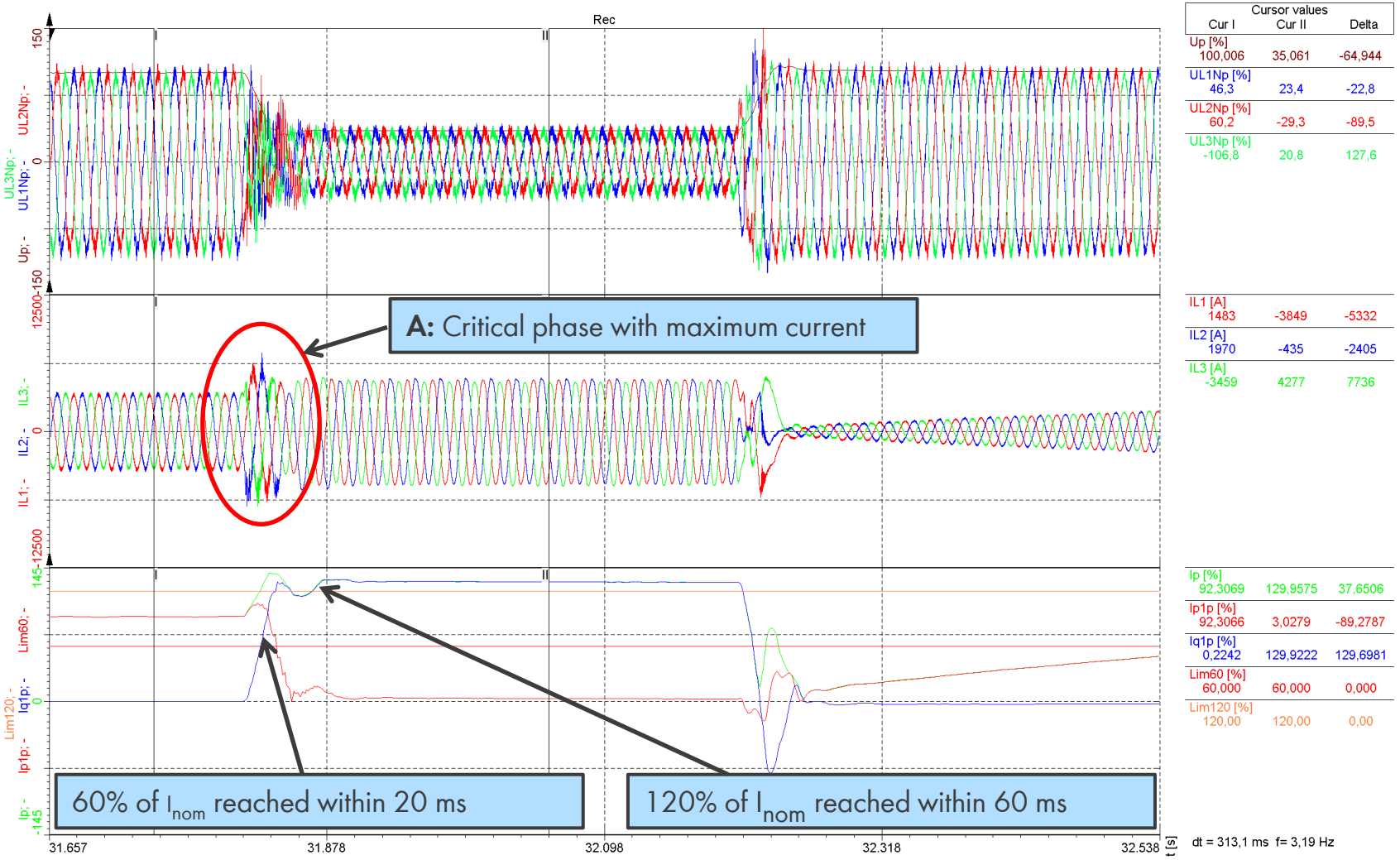

Requirements about reactive current's dynamic behavior fulfilled!

DEPENDENCY OF FRT FUNCTIONALITY ON TRANSFORMER CONFIGURATION

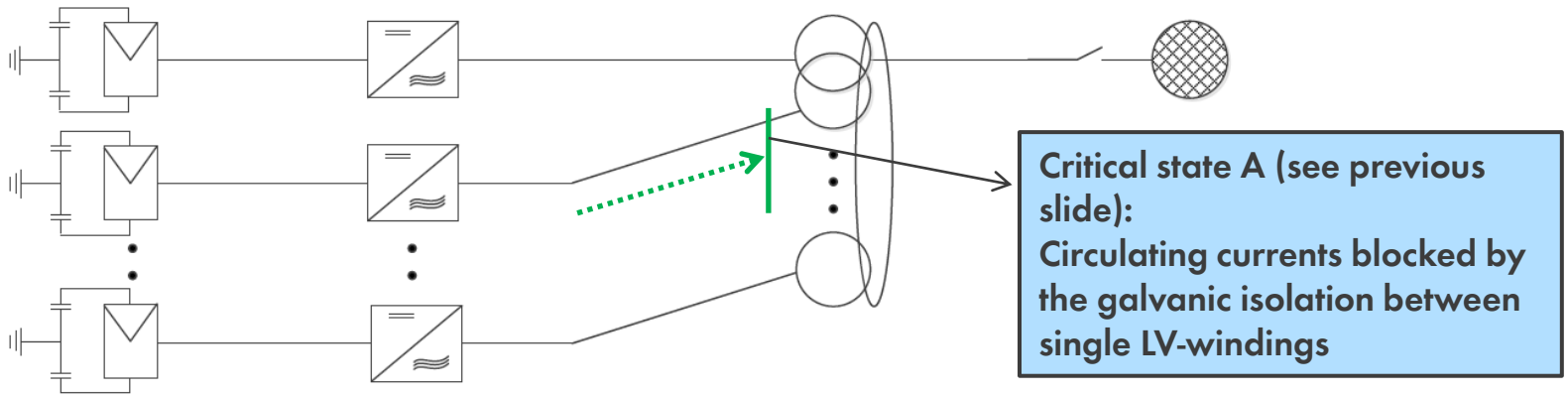

Configuration with a dedicated low voltage winding for every inverter

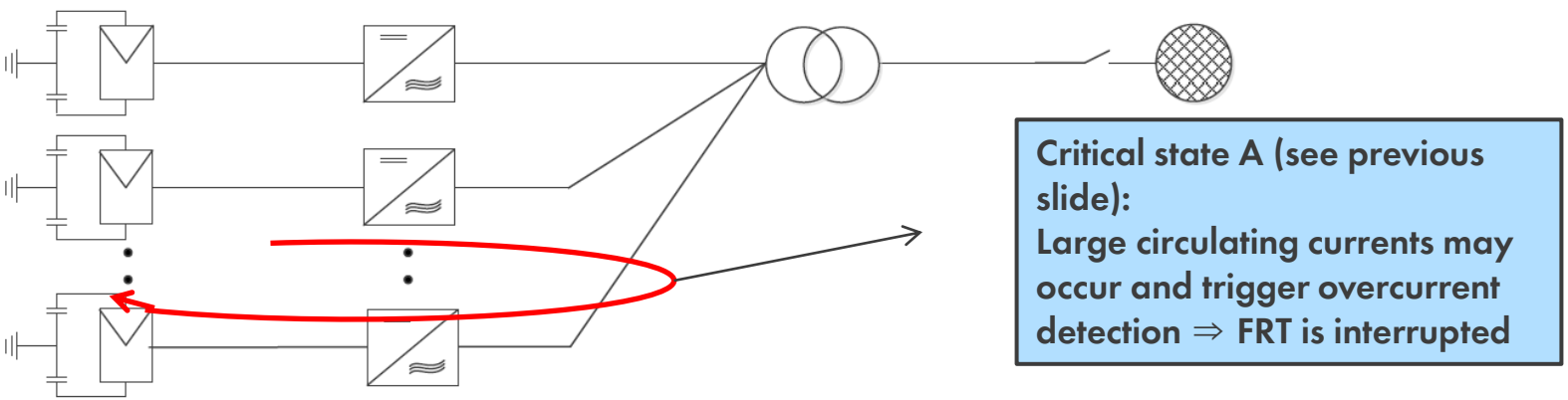

Configuration with one low voltage winding for a couple of inverter

› **In case of multiple inverters connected to one LV-winding: FRT-Test should be performed for the entire set up. Test with one inverter only is not sufficient.**

LOW VOLTAGE RIDE THROUGH WITH HIGH CURRENT INJECTION

LVRT-TEST FOR 2PH FAULT

2ph fault to 15%Un @ 2.5 MW, 25 °C, 3300A set point, 400 ms voltage dip

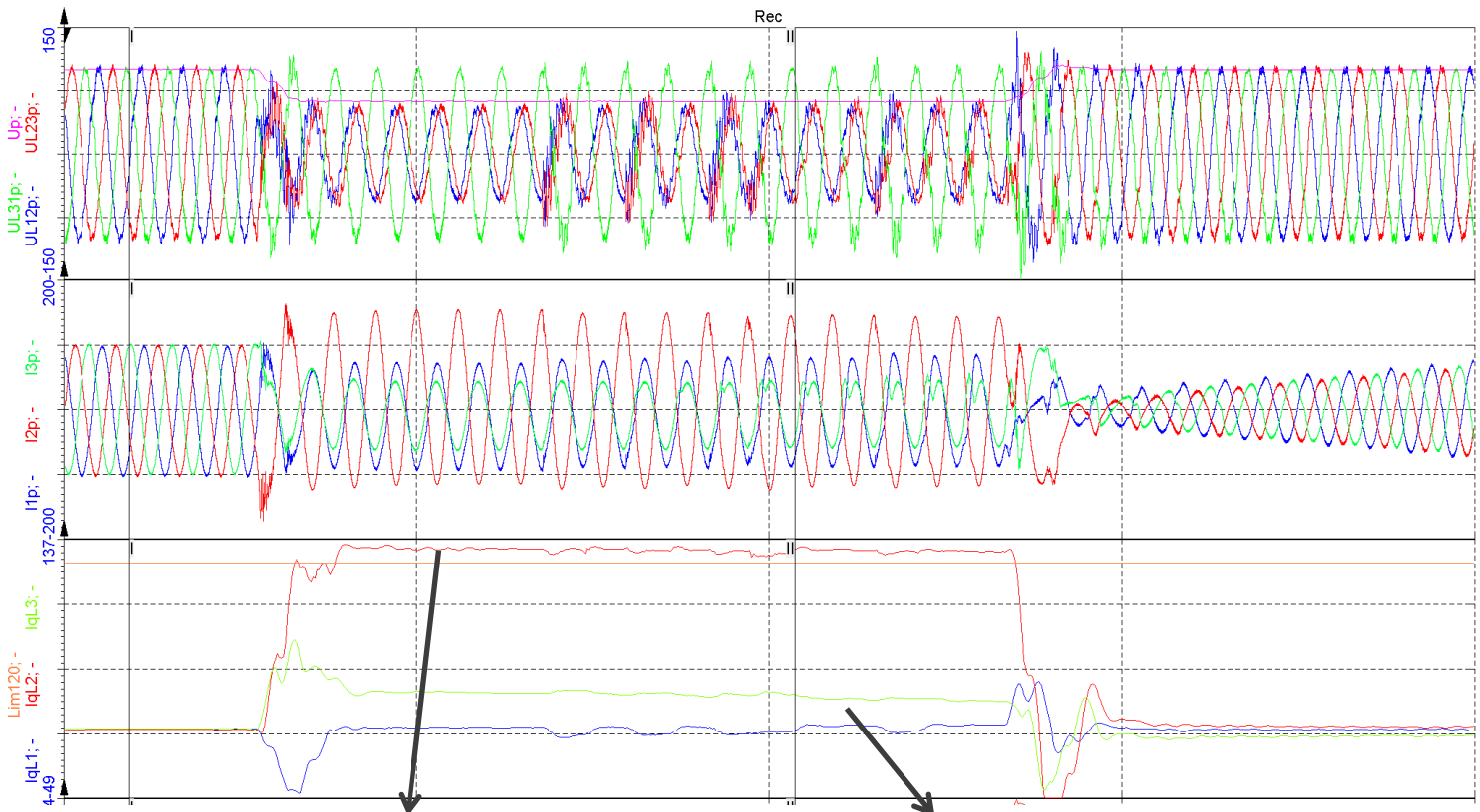

Cursor values	Cur I	Cur II	Delta
UL12p [%]	-14,3	-39,3	-25,0
UL23p [%]	-85,3	-49,6	35,7
UL31p [%]	99,6	88,9	-10,7
Up [%]	100,599	62,021	-38,579
I1p [%]	-64,52	-73,78	-9,25
I2p [%]	-36,32	117,39	153,71
I3p [%]	100,67	-43,83	-144,50
IqL1 [%]	1	-1	-2
IqL2 [%]	0	129	128
IqL3 [%]	1	26	25
Lim120 [%]	120,00	120,00	0,00

Reactive component of phase 2

Reactive component of phase 1 and phase 3 is small.
The current visible in the diagram above is flowing as an active current. ⇒ Pure reactive current injection and same amplitude for all phases: Only in case of three phase failures

Positive sequence voltage determines positive sequence current via k-factor !
Negative sequence voltage determines negative sequence current via k-factor !

LOW VOLTAGE RIDE THROUGH WITH HIGH CURRENT INJECTION

SUMMARY TEST RESULTS DYNAMIC VOLTAGE SUPPORT

- FRT is one of the pillars of ancillary services, renewable energy sources has to offer, in case their contribution to the energy supply rises.
- A FRT current of **120% to 130% the nominal current** is feasible for standard inverters. Tests results have been presented here
- FRT is possible for symmetrical and asymmetrical voltage dips. Both configurations should be tested. Tests have been presented here
- In the initialization phase(voltage dips occurs), a current overshoot and a damped oscillation has to be considered. The semiconductors in the inverters has to handle this state. Thus an endurance test with 310 single FRT events had been performed and presented here.
- FRT test should be performed with no load voltage on DC and not with MPP voltage because the PV generator is unburdened during FRT (only reactive current is injected). In our case 1250 V/ DC @ 50° ambient temperature had been chosen.

> SMA has tested the FRT functionality carefully

ADDITIONAL FINDINGS DYNAMIC VOLTAGE SUPPORT

- If the grid voltage dip falls below a certain limit, FRT is feasible only in case a DC power source is available (PV-generator or battery). VAr- compensation units can not contribute in such a case.

- Due to oscillations in the initialization phase, it could be necessary to choose a FRT current higher the requested current to be sure to reach the nominal FRT-value in time.

- In most of the cases a k-factor larger than 2 has to be chosen. This is necessary to compensate the voltage drop on transformers and line inductors in the plant (inverter measurement is localized on LV-side and the inverter increases the measured voltage with his injected FRT current).

- In case of multiple inverters connected to one LV-winding: FRT-Test should be performed for the entire set up. Test with one inverter only is not sufficient.

Literature:

- A modelling approach for dynamic short-circuit analysis of the German power system considering all voltage levels, Sascha Altschäffel; International ETG Congress 2015, November 17-18, 2015, Bonn, Germany
- "Renewables Standards", version 1.0, November 2013, Regulatory & Supervisory Bureau – Dubai, UAE
- VDE-AR-N 4110, draft, March 2017 (Technical requirements for the connection of customer equipment to MV-grid)
- dena Ancillary Services Study 2030, Berlin, 11/02/2014
- Dr. Karl Nesemann, A. Falk, PV-Zentralwechselrichter: Klar zur Energiewende? Future-proof PV inverter has to be designed for high DC operation voltages and for reactive power at night, 31. Symposium Photovoltaische Solarenergie 2016, Beitrag D, (in English language)
- Enhanced current control scheme for large-scale solar inverters, Tomomichi Ito, Hitachi Ltd., Japan; PCIM Europe 2017, 16 – 18 May 2017, Nuremberg, Germany

Contact: andreas.falk@sma.de – Tel.: +49/561/ 9522-3313