7th Solar Integration Workshop, 24-25 October 2017, Berlin, Germany

Investigation of Impacts of Solar PV on Transmission System Voltage Stability Considering Load Characteristics and Protection

Baheej Alghamdi[1)], Mohammed Alamri[2)] and **Le Anh Tuan**[3)]

[1)] *Department of Electrical and Computer Engineering, King Abdulaziz University, Saudi Arabia*
[2)] *Saudi Aramco, Saudi Arabia*
[3)] ***Division of Electric Power Engineering, Department of Electrical Engineering, Chalmers University of Technology, Sweden***

Content

- Motivation and aims
- Study approach
- Modeling of the system
- Case studies: Results
- Conclusions

Motivation: Why this study

- Growing number of solar PV projects worldwide

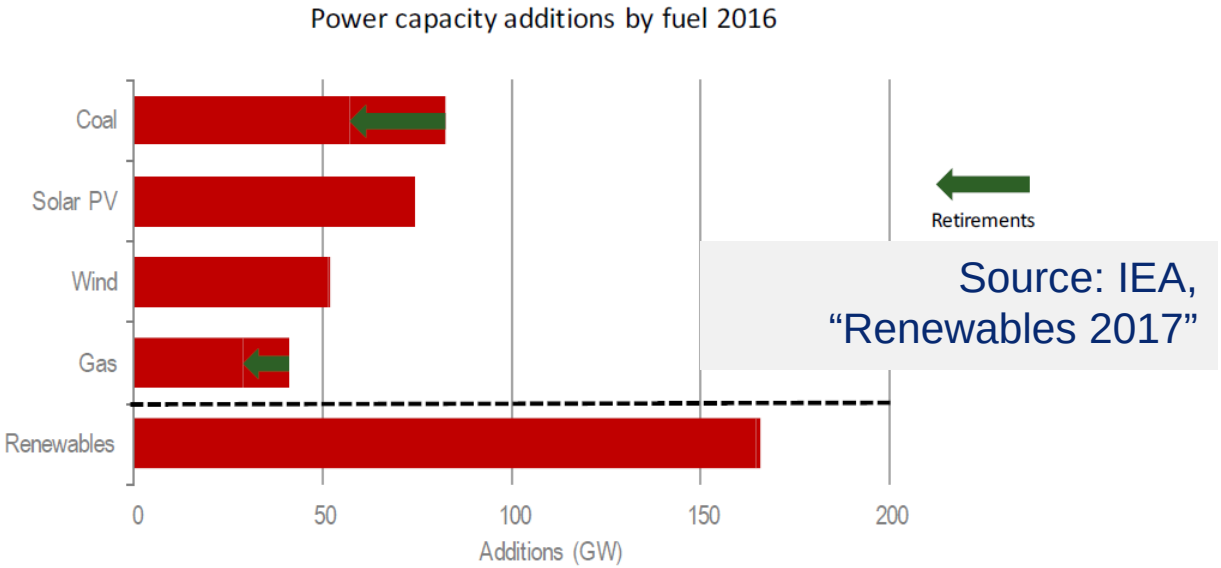

- Intermittency/uncertainty of power production from solar PV
- Effect of location of solar PV on the stability of the system:
  - Large scale PV farms installed at areas with high irradiance levels which tend to be far away from load centers
- Needs of studies on impacts of large scale solar PV on voltage stability considering:
  - Changes in solar Irradiance
  - Protection system and load characteristics.

Aims

- Investigate impacts of large-scale solar PV on the voltage stability of transmission system, considering:
  - ✓ load characteristics
  - ✓ location of solar farm
  - ✓ variation of solar irradiance.
  - ✓ distance protection of transmission system

Study approach

- Step-1: Determine best placement of solar PV in the Nordic-32 test system based on solar irradiance
- Step-2: Determine maximum penetration of solar PV in the system, considering frequency requirement
- Step-3: Carry out voltage stability analysis:
  - ✓ Study of post-disturbance voltage recovery time analysis with high solar PV penetration with fixed solar irradiance
    - o Role of the protection system
  - ✓ Voltage stability analysis considering changes in solar irradiance and load profile

Content

- Motivation and aims
- Study approach
- Modeling of the system
- Case studies: Results
- Conclusions

Placement of solar PV in Nordic-32 test system

- The highest solar irradiance is found in the eastern part of the network.
  - Install PV farms in east side of the grid

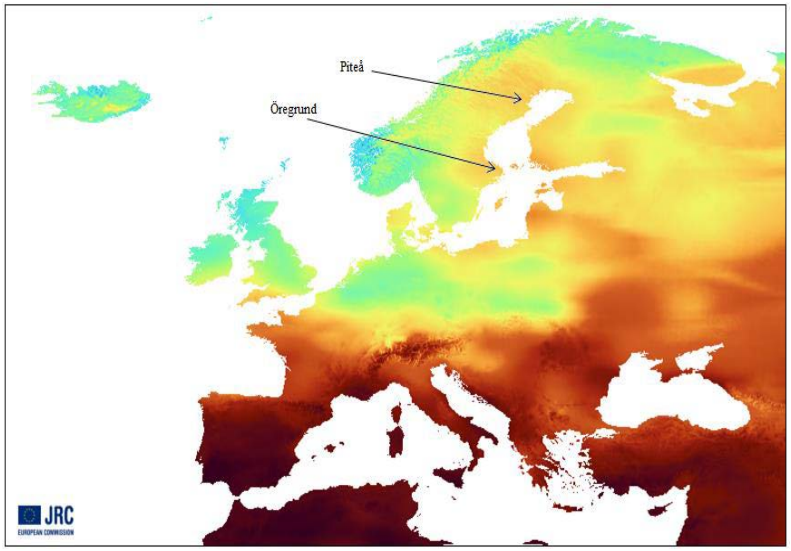

Solar irradiance distribution in Europe

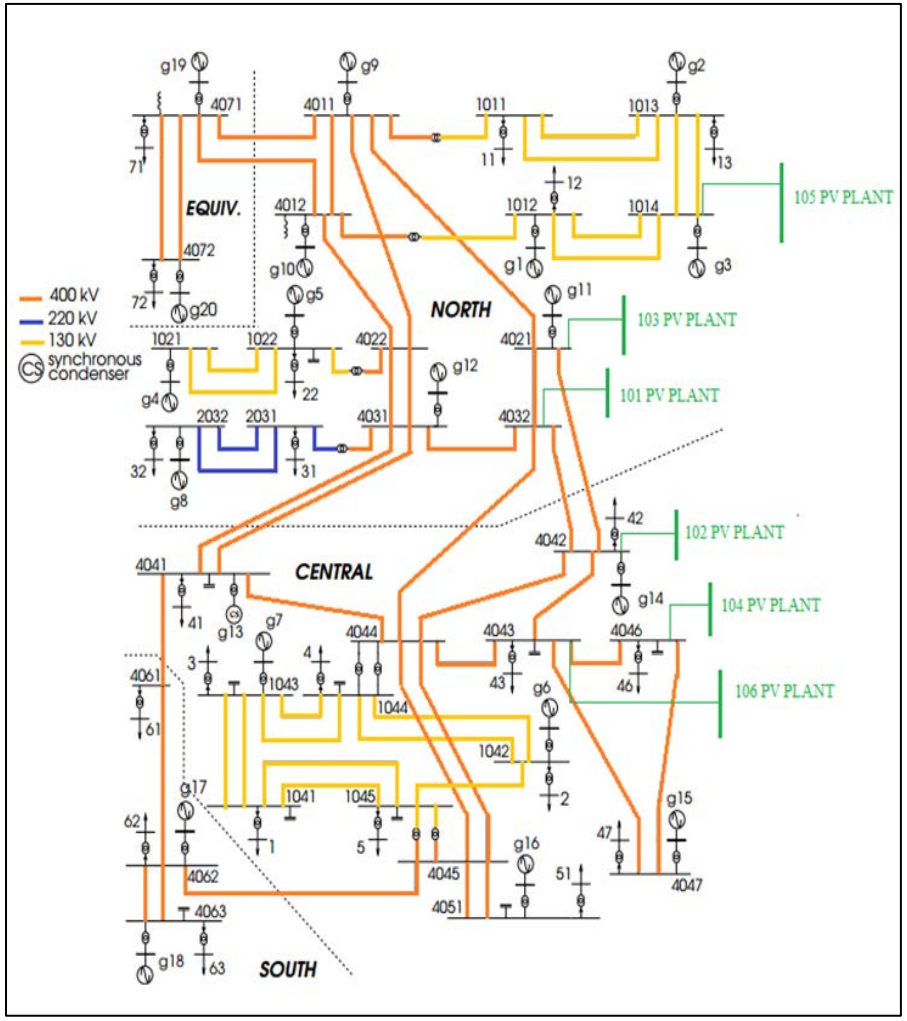

Modified Nordic-32 test system (green buses represent solar PVs)

Characteristics of Nordic-32 test system

Number of Buses	41
Total Generation	11558 MVA
Peak Solar Generation (in June) with 30% penetration	≈ 3700 MVA
Total Load	**11443 MVA**
Fixed Shunt Compensation	1375 MVAr

- The system also consists of induction motor loads.
- Most of the loads are concentrated in the southern part
- Solar PVs are installed on the eastern side of the network.

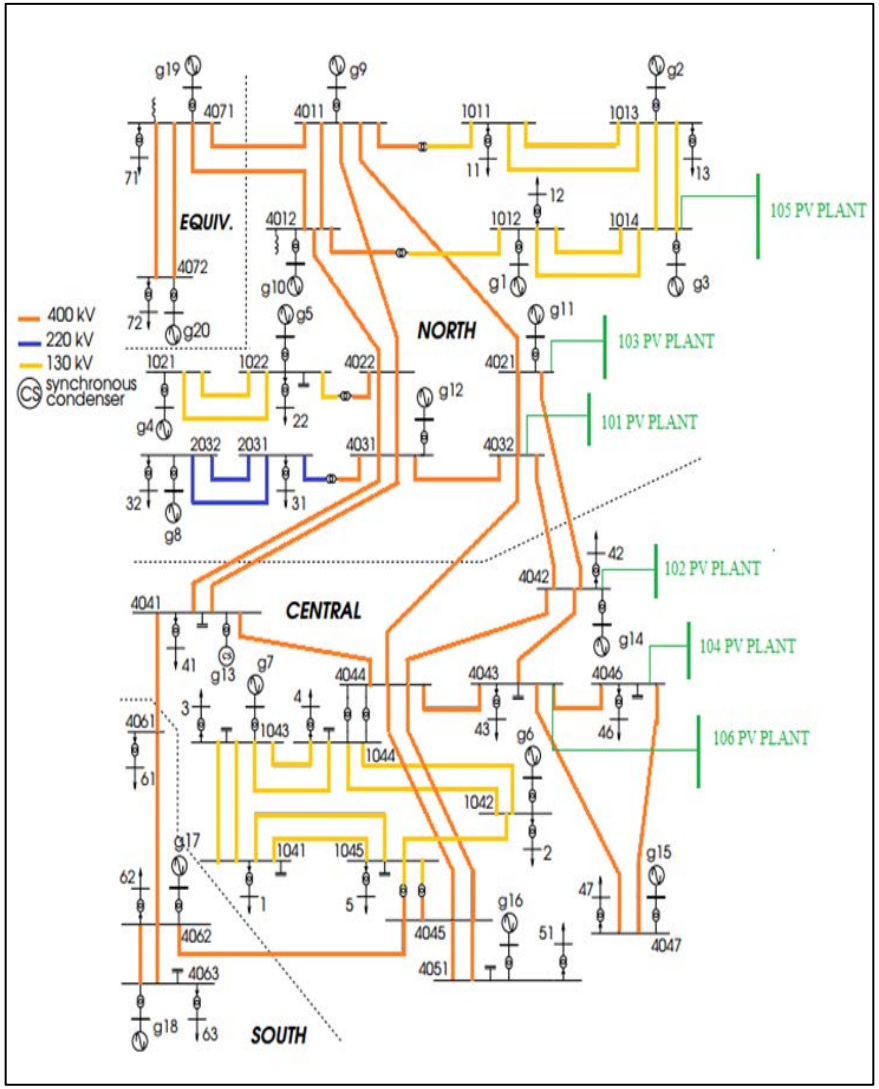

Modified Nordic-32 test system (green buses represent solar PVs)

Characteristics of Nordic-32 test system

- Dynamic analysis of the system is performed using PSS/E.
- All components modelled using built-in PSS/E dynamic models:
  - ✓ Solar PV plant and its voltage source converters
  - ✓ Turbine governors and over-excitation limiters
  - ✓ On-load tap changers.
  - ✓ Induction motor loads, constant current loads and constant impedance loads.
  - ✓ Three-zone distance relays for transmission line protection

Maximum Penetration of solar PV

Max penetration level should limit the max frequency deviation by 0.5 Hz in case of a contingency.

Frequency with different PV penetration levels after sudden loss of large generation unit.

30% PV penetration slightly exceeds by the 0.5 Hz threshold but has been selected for this study.

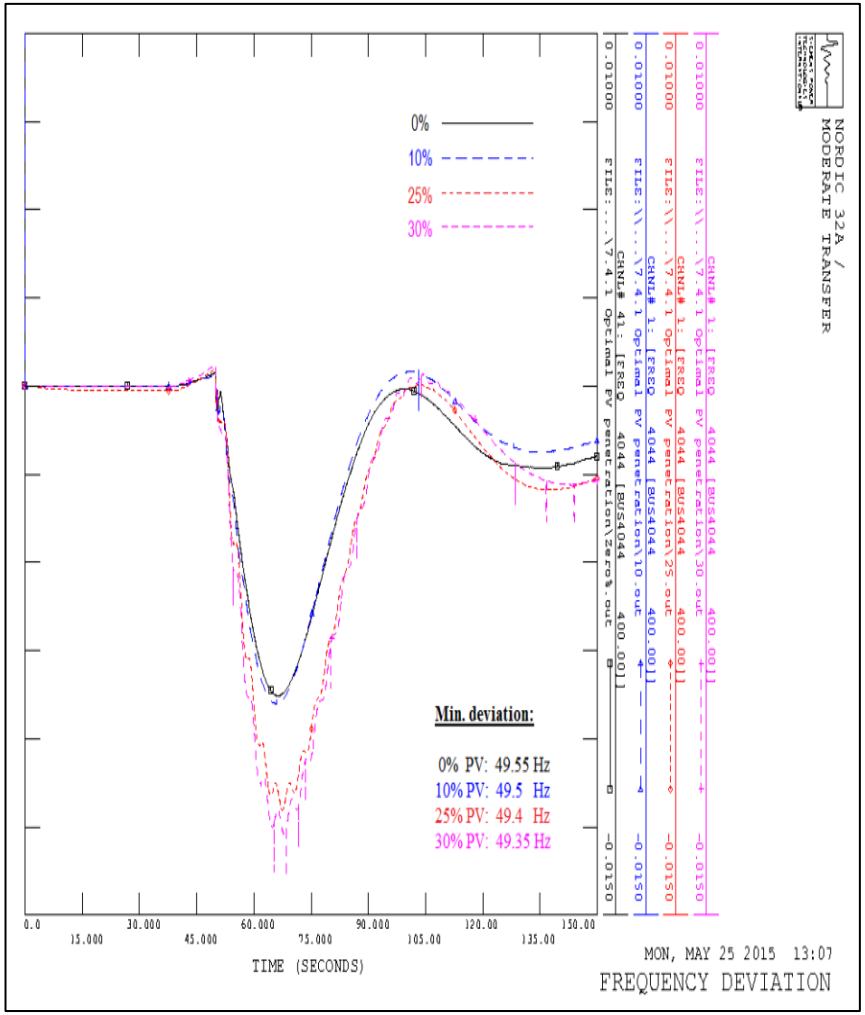

$$\text{Penetration } \% = \frac{\text{PV production}}{\text{Total active generation of base case}}$$

Simulated solar PV plants

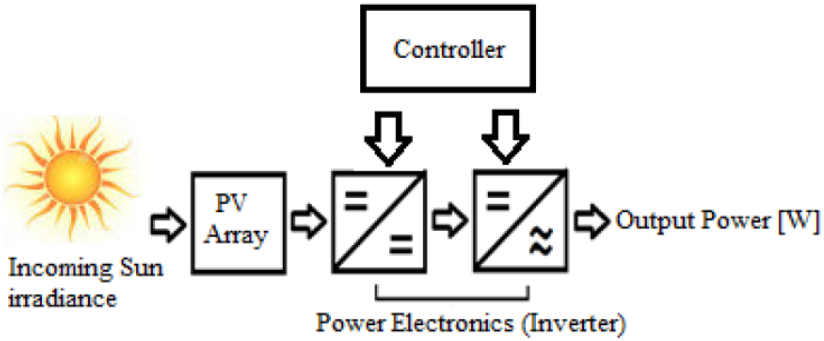

A solar PV model in PSS/E

Single PV plant rating	600 MW ± 200 MVAr
Irradiance levels	600 W/m^2 yields 100% of the rated power 400 W/m^2 yields 95% of the rated power 200 W/m^2 yields 50% of the rated power
Controller	P-V control mode

Setting of distance relays

- Zone 1: covers 80% of the protected line with a time delay of 5 cycles
- Zone 2: covers 100% of the protected line and 20% of the shortest adjacent line with a time delay of 15 cycles
- Zone 3: covers 100% of the protected line and 120% of the shortest adjacent line with a time delay of 30 cycles

Content

- Motivation and aims
- Study approach
- Modeling of the system
- Case studies: Results
- Conclusions

Study cases

Study cases

- Post-disturbance voltage recovery time analysis with solar PVs producing at their rated power
- Voltage collapse analysis while considering changes in the solar irradiance and the load profile

Post-disturbance voltage recovery

Impacts of solar PV:

Solar PVs contributes to delayed voltage recovery time

- Steady state voltage is lower
- Installed far away from the load center
- High reactive power losses on the network

Impacts of induction motors:

Induction motors tend to worsen voltage recovery times due to their fast power restoration dynamics

Fault on 4032-4044 at 100 s

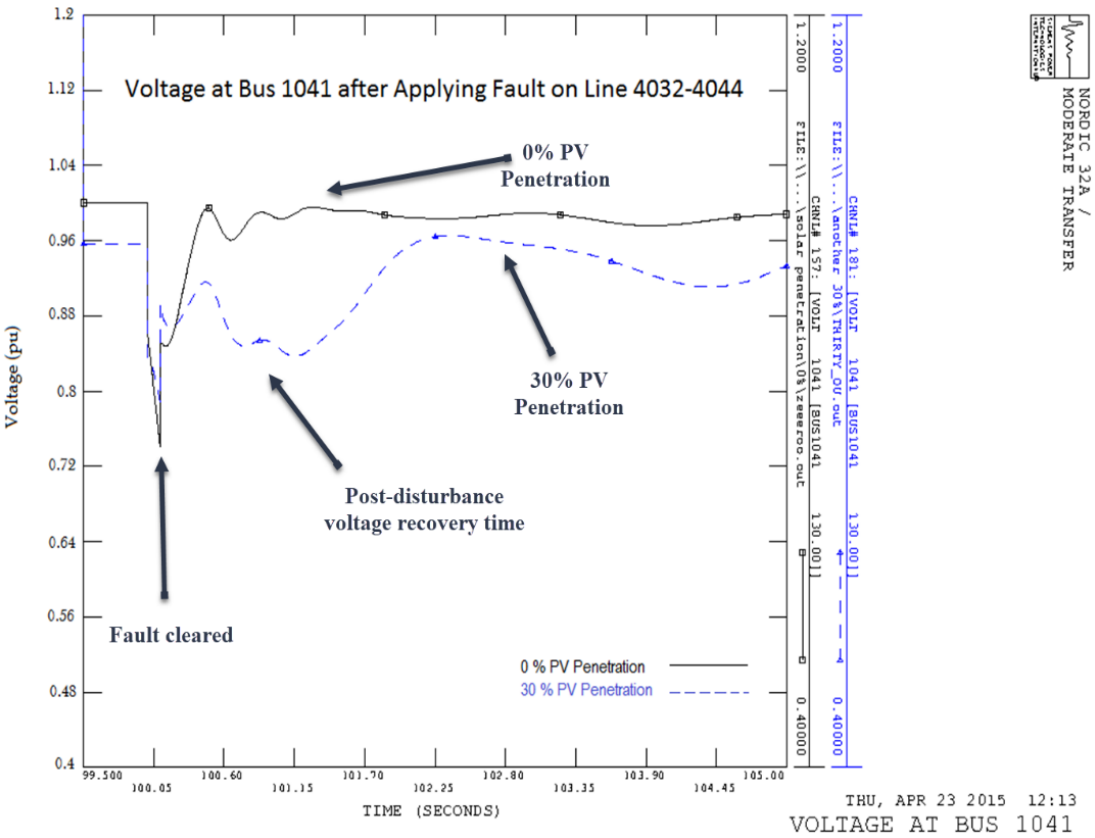

Post-disturbance voltage recovery

Simulated faults

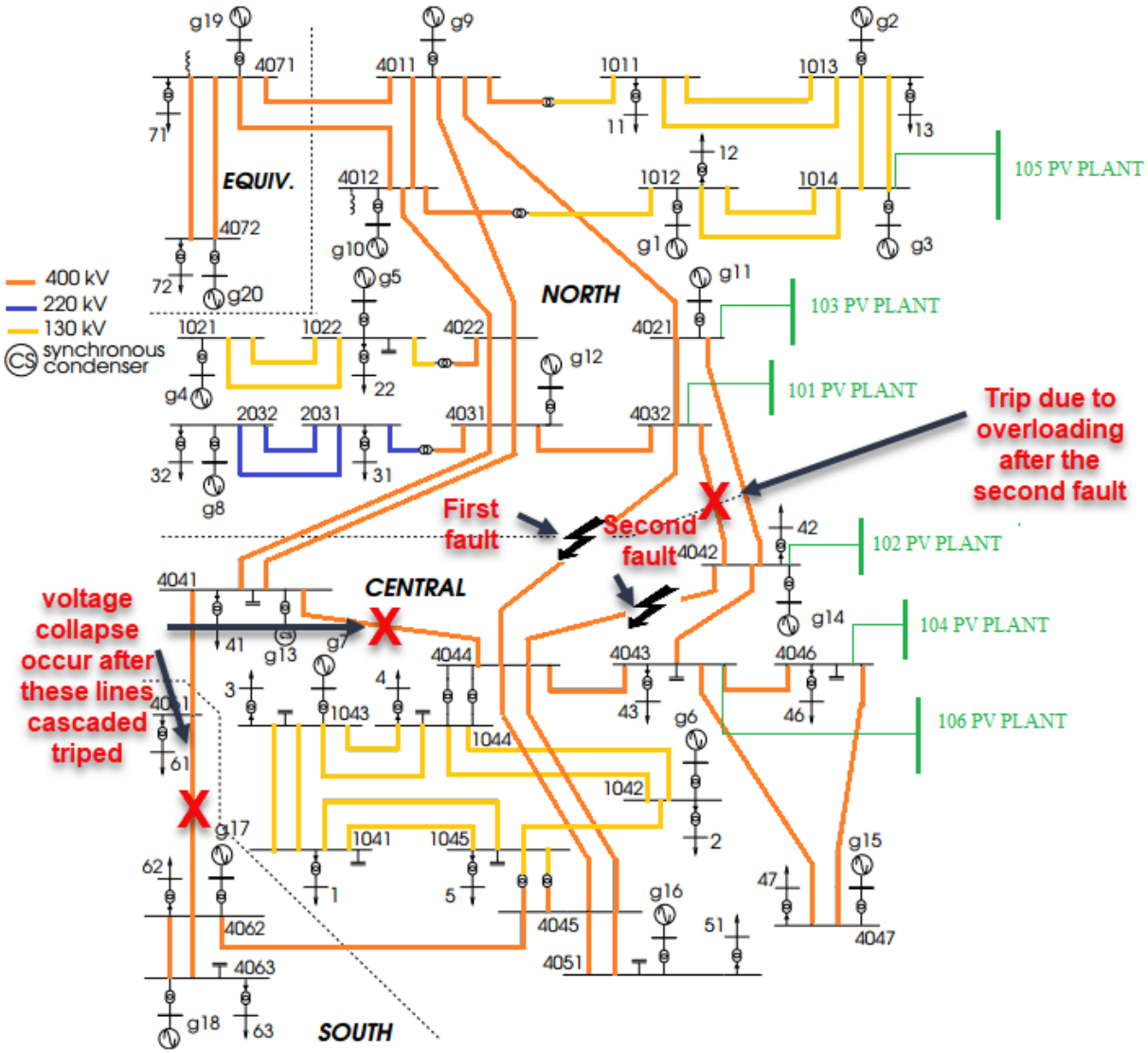

Post-disturbance voltage recovery

Impacts of solar PV:

- Voltage collapse occurs in case with 30% PV

Impacts of protection:

- Cascade trippings of zone-3 relays on 4032-4042, 4041-4044 and 4041-4061
  - PV plants are located in the east of the network and thermal plants which are close to the load center were shut down.
  - large power flows through the critical transmission lines from north to south

Next fault on 4042-4044 at 200 s

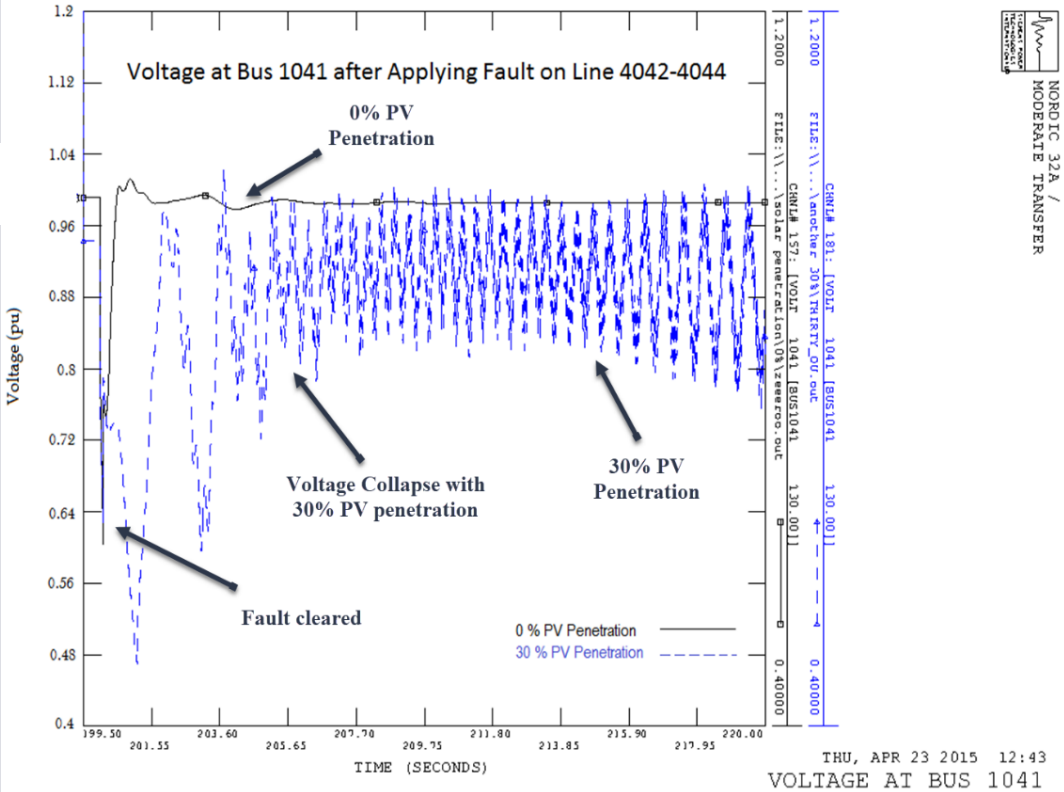

Changes in solar irradiance and load profile

The average power generated by the solar PVs

- Consider 4 seasons
- Load profile during each of those periods closely mimics the load profile of the Nordic power system.
- Irradiance profiles for the regions are used to calculate power generated by the PVs

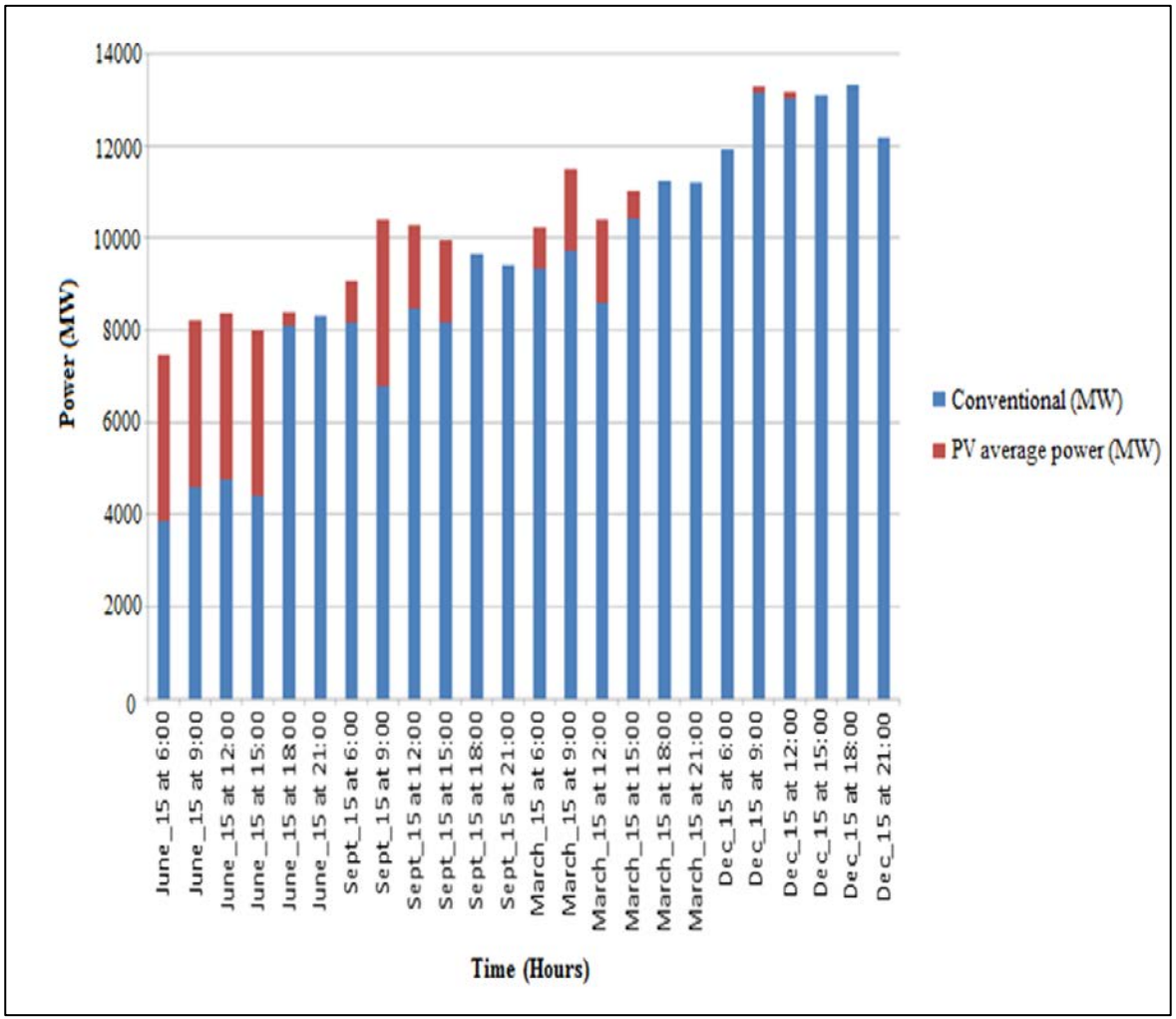

Changes in solar irradiance and load profile

Simulations performed for three cases:

Case	Solar	Load
1	HIGH (95% PV rated power)	HIGH
2	HIGH	LOW
3	LOW (ZERO)	VERY HIGH

Simulation steps in each case:

- The simulation will be run for 550 s. Every 50 s the irradiance value will change.
- Faults applied on the critical transmission lines in sequence:
  - ✓ 4032-4044 at T = 100 s
  - ✓ 4042-4044 at T = 200 s
  - ✓ 4031-4041 at T = 300 s
  - ✓ 4042-4043 at T = 400 s

Case 1: High solar high load

15th day of four months at 9 A.M.

Voltage collapse occurred for June, September after the first fault.

The system was more prone to voltage instability due to:

- High PV production during the month of June and September (when the Irradiance is very high)
- Most conventional generations close

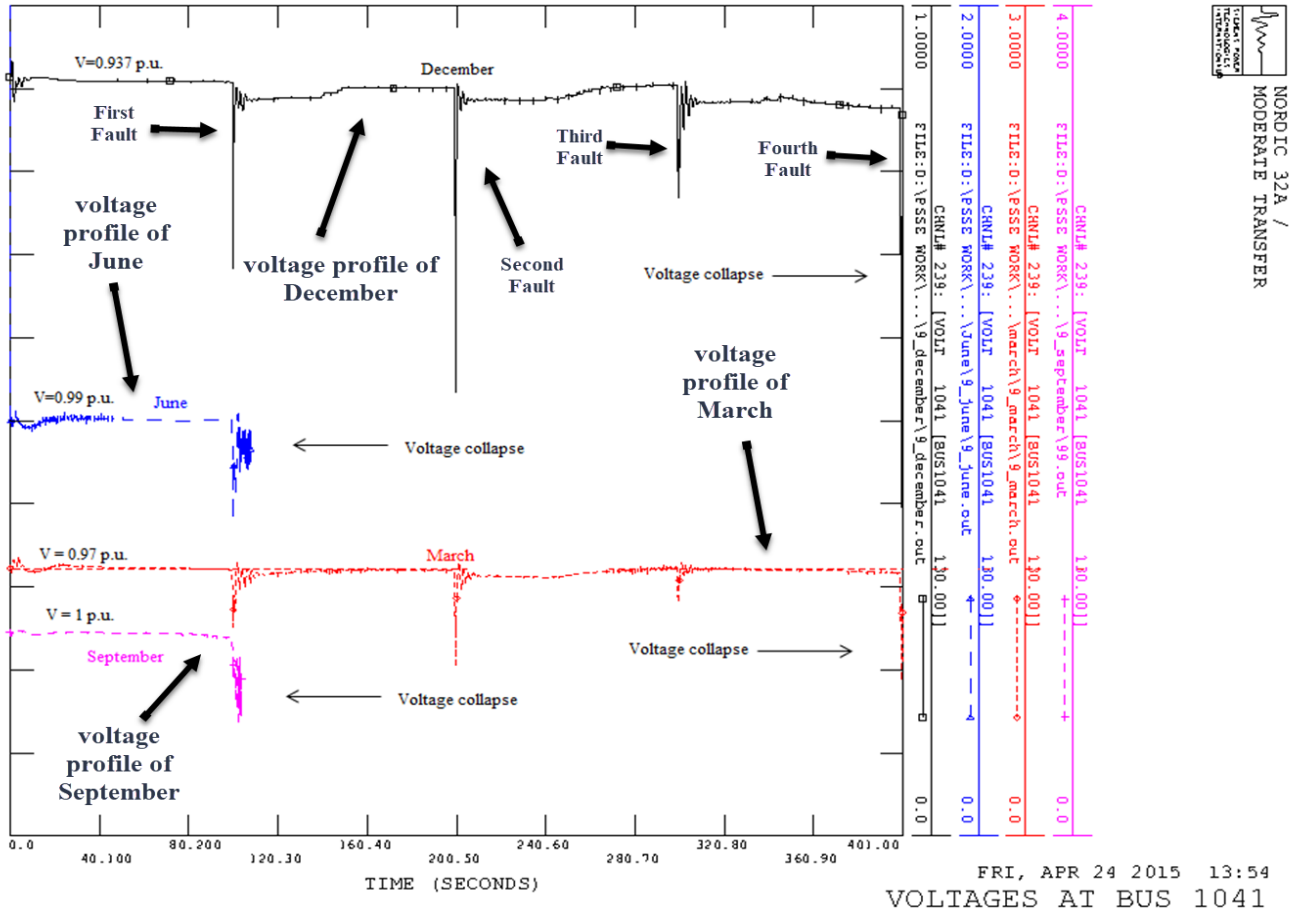

Case 2: High solar and low demand

15th day at 6 A.M.

Voltage collapse has occurred after the fourth line fault (T = 400 seconds) in all seasons except in June.

In June at 6 a.m. the load profile is lowest compared to the rest of the months while the irradiance is highest.

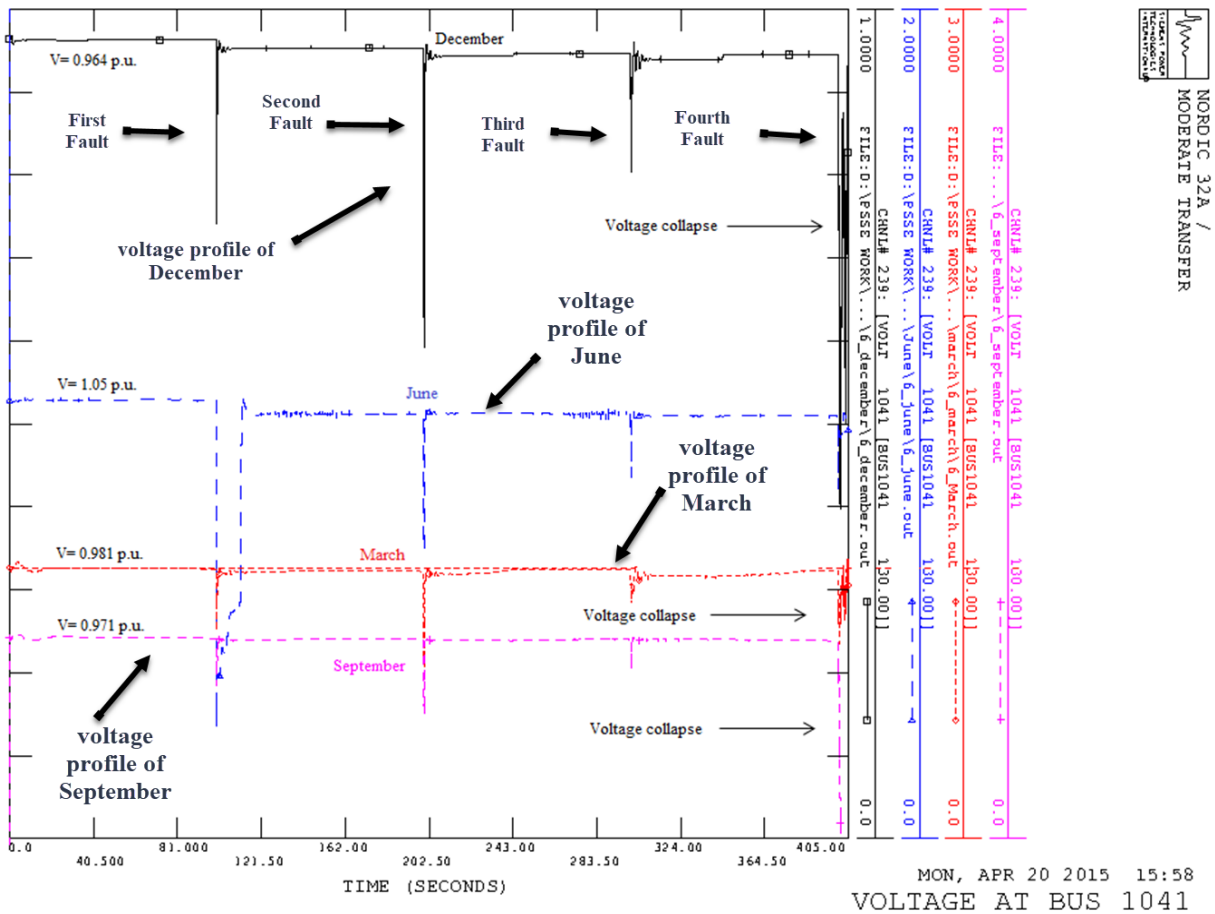

Case-3: Low solar and high demand

15th day at 6 P.M.

Voltage collapses occured after 3rd and 4th faults.

More solar, more prone to voltage instability when comparing Case 1 and Case 3.

- Solar irradiance has been reduced almost to zero.
- PV plants still provide reactive power support

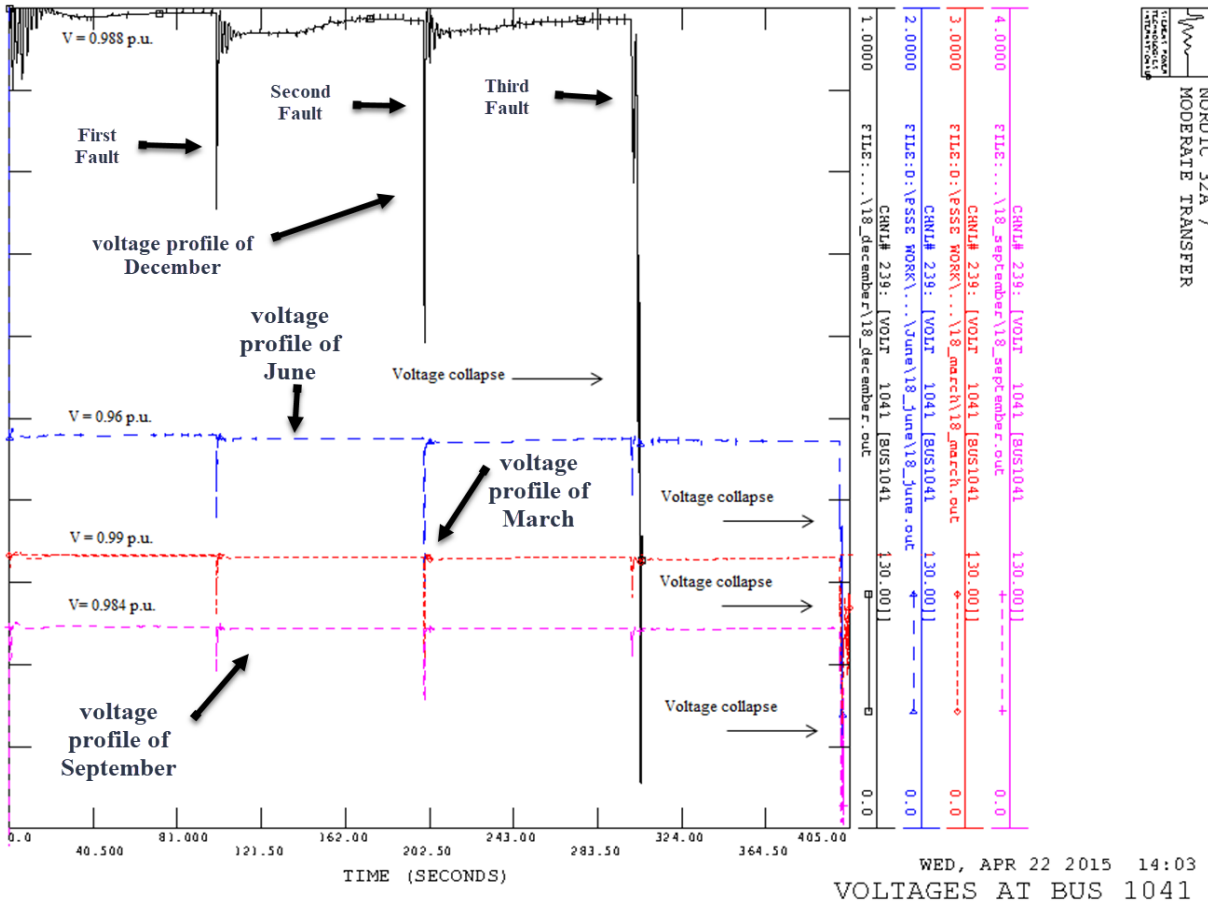

Conclusions

High PV production tends to contribute to delayed post-disturbance voltage recovery time.

Induction motor loads further worsened the voltage recovery time.

Zone-3 relays can further cause cascading tripping of lines.

Voltage stability gets worsen during periods of high PV production due to significant reactive power losses in the transmission lines and lower production from conventional generations.

Voltage stability gets improved during periods of low solar irradiance due to reactive supports from PV plants

The conclusions are however dependent on:

- Characteristics of networks
- Locations of PV plants
- Control modes of PV plants


Thank You

Post-disturbance voltage recovery

Impacts of solar PV:

Solar PVs contributes to delayed voltage recovery time

- Steady state voltage is lower
- Installed far away from the load center
- High reactive power losses on the network