BIOSTIRLING-4SKA
An Hybrid Stirling Prototype

A cost effective and efficient approach for a new generation of solar dish-Stirling plants based on storage and hybridization

BioStirling-4ska

Call FP7-ENERGY-2012-1
Grant Agreement nº 309028
Berlin, Germany, 23rd Oct 2017

INDEX

INDEX

1. Participants

- Partners involved:

Industrial Partners

Renewable Energy + Solar

Gestamp Solar Steel

Mirrors:

machttechnik

toughtrough®

Stirling Engine:

CLEANERGY

Technology suppliers

Renewable Energy Technology

ALENER

Biomass:

TAMPERE UNIVERSITY OF TECHNOLOGY

Storage:

Universidad de Sevilla

Solar Dish Concentrator:

CTAER ANDALUCIA

Control:

Fraunhofer

Technology in Moura:

Lógica e.m. s.a.

SKA Demonstrator

CSIC Consejo Superior de Investigaciones Científicas

ASTRON

instituto de telecomunicações

Max-Planck-Gesellschaft

1. Participants

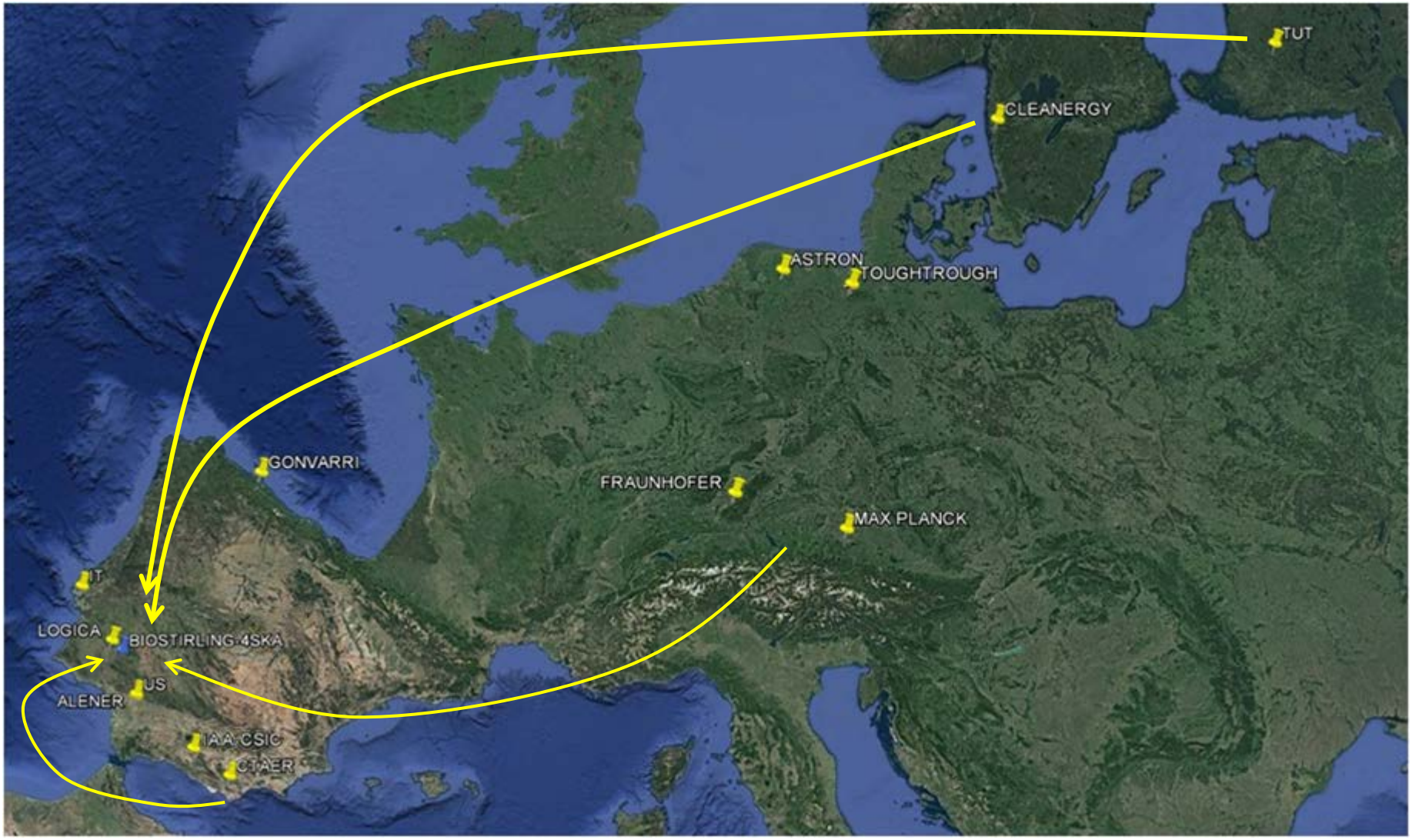

INDEX

2. Objectives

- B4SKA is a Power Plant based on a Hybrid Stirling Dish (HSD) with experimental exploitation, under contract signed with the European Commission for the Seventh Framework Program (7FP), being the main aim to provide electric power for a set of demonstration astronomical SKA antennas to be mounted in Contenda, Portugal.

- The objective of the demonstration B4SKA Plant is the generation of clean electric power simultaneously using solar power and biomass energy in the form of biogas, and serve as a scalable example of power supply for future developments of applications to larger scientific infrastructures like the SKA, a radio-telescope to be built in South Africa or Australia (www.skatelescope.org).

2. Objectives

- Innovations in BIOSTIRLING-4SKA project focus on:

Cost
- New designs for mass manufacturing.
- New manufacturing and O&M Strategies.
- Structures with less weight.
- Easy commisioning and maintenance.

Efficiency
- Improved Stirling
- New designs with reduction the reflectivity loss.
- New reflective materials.

DEMO SKA & New Commercial Solar Dish Technology

Dispatchability
- Biomass / solar hybrid receiver.
- Storage systems

Life-time
- Glass coatings.
- Improvement of steel resistance and stiffness.

INDEX

3. System Overview

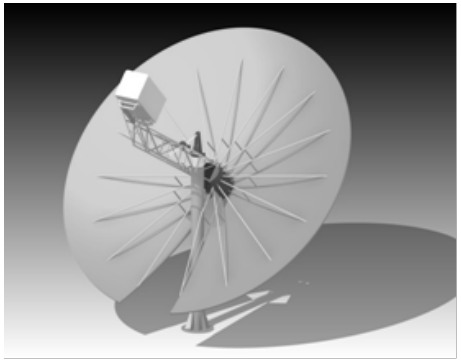

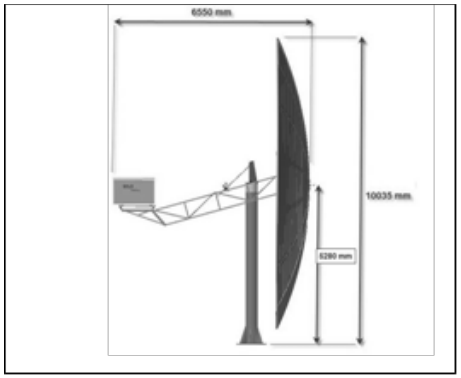

Hybrid System: solar receiver, which absorbs the solar heat energy; combustor, where syngas is burned to produce heat, with syngas control system; and the hybridization system which makes it possible to seamlessly use heat from two sources, solar and gas burner.

Basic Stirling Engine: core engine with crank drive, engine block and the Stirling specific heat exchangers; working gas control system which regulates working gas pressure and fills new gas if working gas is lost, cooling system consisting of a fan, radiators, and circulation pump, generator and the Engine Control Unit (ECU).

Main features:

- Power Output: 13kW$_e$ in gas mode / 10kW$_e$ in solar mode
- Dimensions: 1358 x 860 x 980 (mm)
- Weight: 481 kg

3. System Overview

- BIOSTIRLING-4SKA needs:

The B4SKA plant will feed the power need from the SKA demonstrator receivers and computing equipment with a 400 VAC 3 phase bus.

The electric interface between the SKA demonstrator and the B4SKA will be a switch with power supply at 400 VAC.

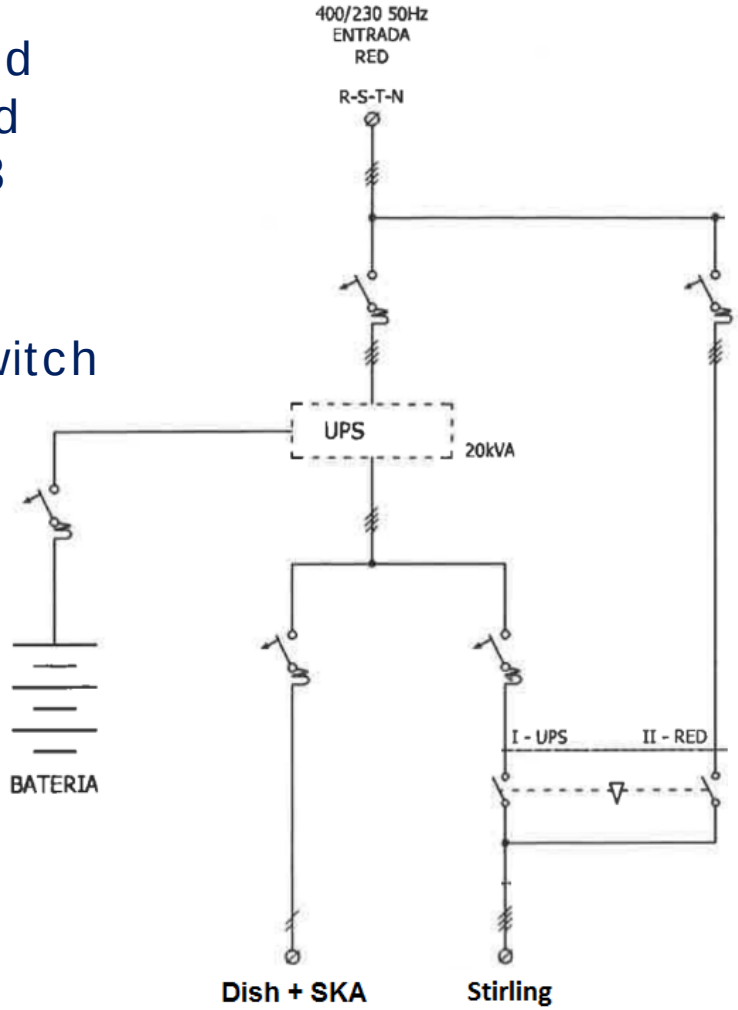

Power required by the SKA Demonstrator Plant in Moura (Portugal):

- 20 kWe for the receivers (24/7)
- 20 kWe for the computing (24/7)
- 10 kWe air conditioning (on/off)

Power required by the BioStirling Plant:

- Stirling Engines: 0.2 kW_e per engine
- Control System: 0.1 kW_e
- Tracking System: 0.6 kW_e per tracker

3. System Overview

LayOut

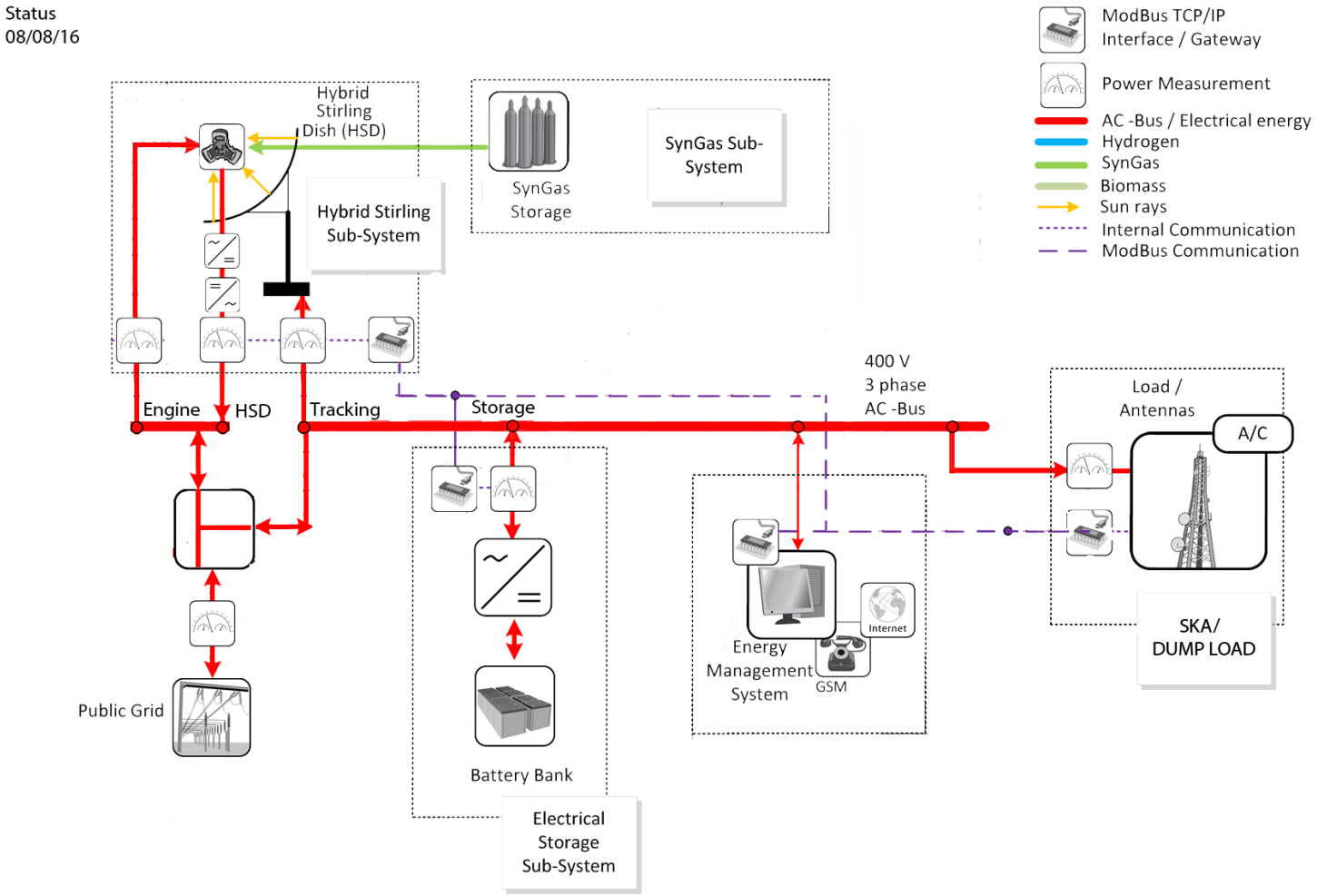

INDEX

4. Tasks

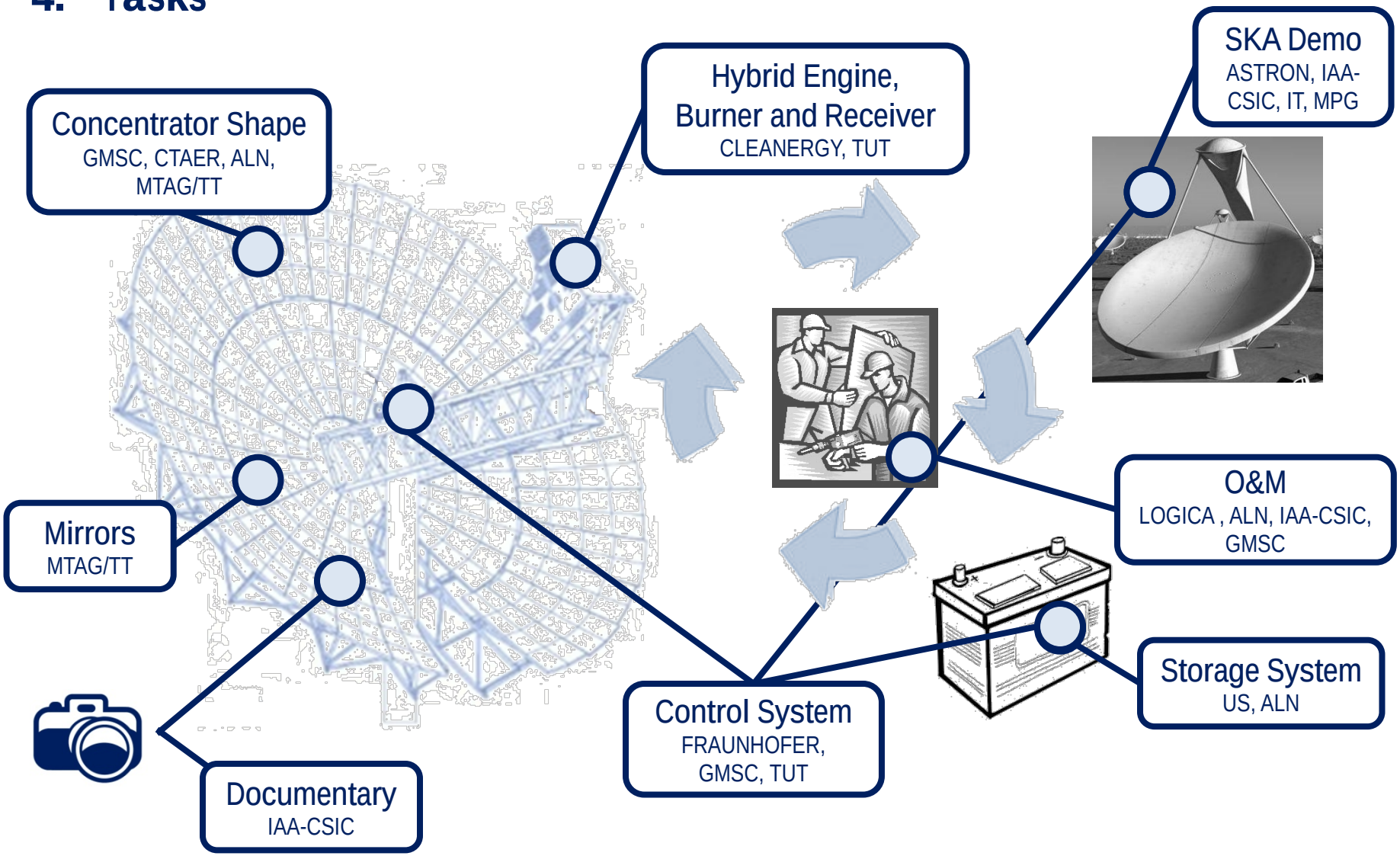
Concentrator Shape
GMSC, CTAER, ALN, MTAG/TT
Hybrid Engine, Burner and Receiver
CLEANERGY, TUT
SKA Demo
ASTRON, IAA-CSIC, IT, MPG
Mirrors
MTAG/TT
O&M
LOGICA , ALN, IAA-CSIC, GMSC
Storage System
US, ALN
Control System
FRAUNHOFER, GMSC, TUT
Documentary
IAA-CSIC

INDEX

5. Prototype

Leader: GMSC

- Dish and tracking system – Conceptual Final Design

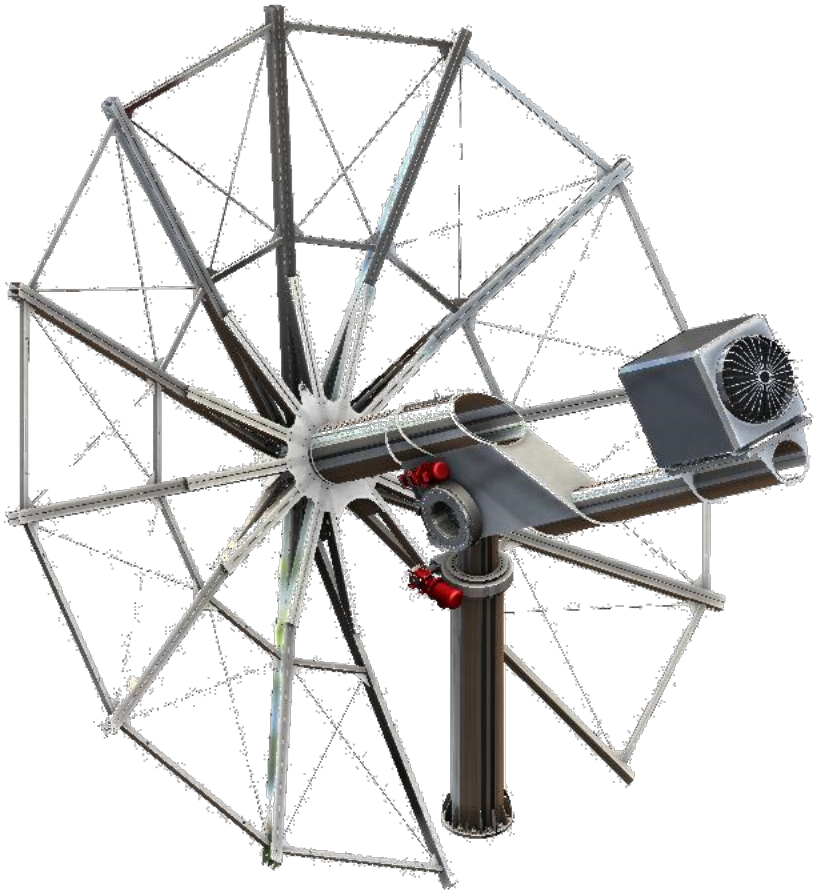

5. Prototype

Leader: GMSC

- Dish and tracking system – Validation

5. Prototype

Leader: GMSC

- Dish and tracking system – Stirling Engine Testing

5. Prototype

Leader: TT

- Mirrors – Steel Adapter for Mirrors

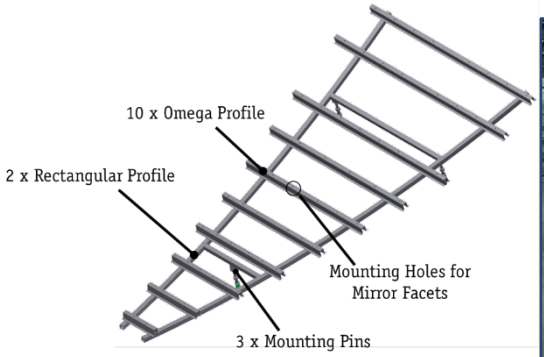

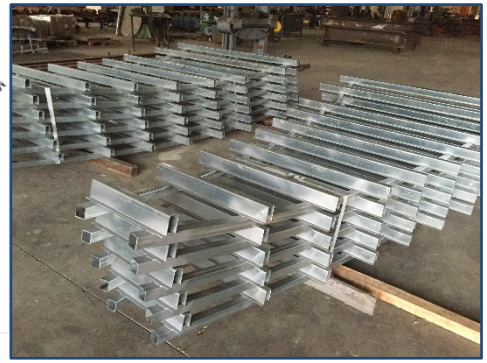

Steel adapter unit description

Positioning and mounting of adapter unit

Dish structure ready for mirror installation

5. Prototype

Leader: TT

toughtrough®

- Mirrors – QA test of Installed Dish Mirrors

Test setup for QA test and evaluation of TT Dish mirror

Burning marks on „fake“ receiver

5. Prototype

Leader: FH Fraunhofer

- EMS

Updated Data Loads and Subsystems

Load SKA Demo	Power Consumpt.	Variability	Comments
Antenna	20kW	0,1%	Controllable

Biostirling	Power Production	Variability/Time	Comments
Stirling Engine	9kW (rated 10kW)	3kW +/- per min	Grid connected

Bidirectional Inv.	Power Production	Variability/Time	Comments
Inverter	20 kVA		UPS functionality
Battery	?	instantaneous	

5. Prototype

Leader: FH

- EMS

Installed EMS and Monitoring Hardware. Overview

5. Prototype

Leader: FH Fraunhofer

- EMS

EMS and Data Collection Box

Embedded system with OpenMUC data collector

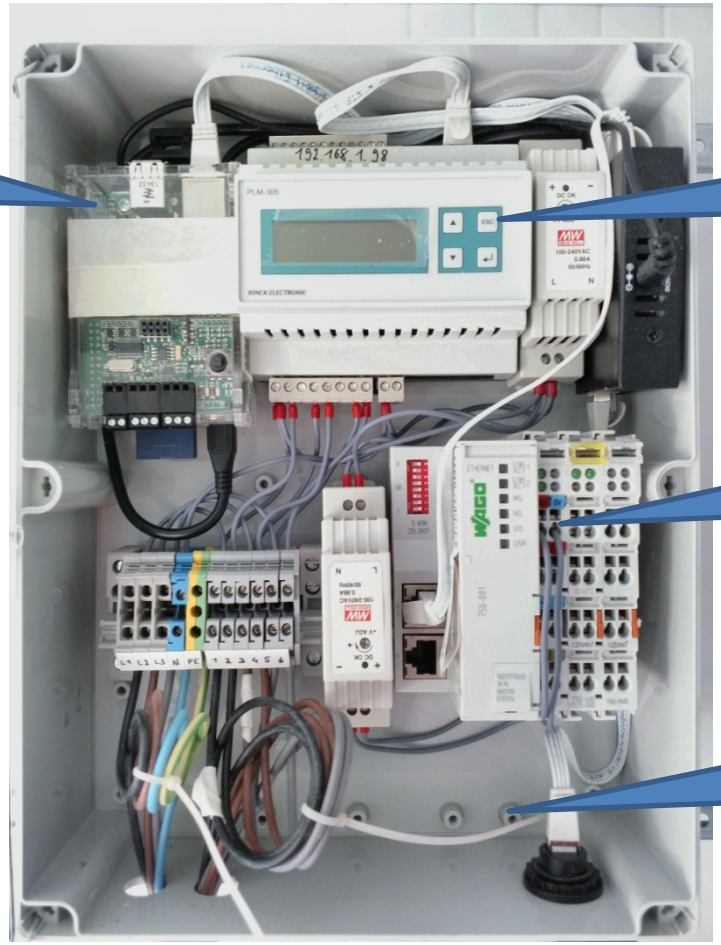

Power measurement

Programmable Logic Controller (PLC)

ModBus TCP/IP communication (via switch)

5. Prototype

Leader: FH

- EMS

Hardware Details

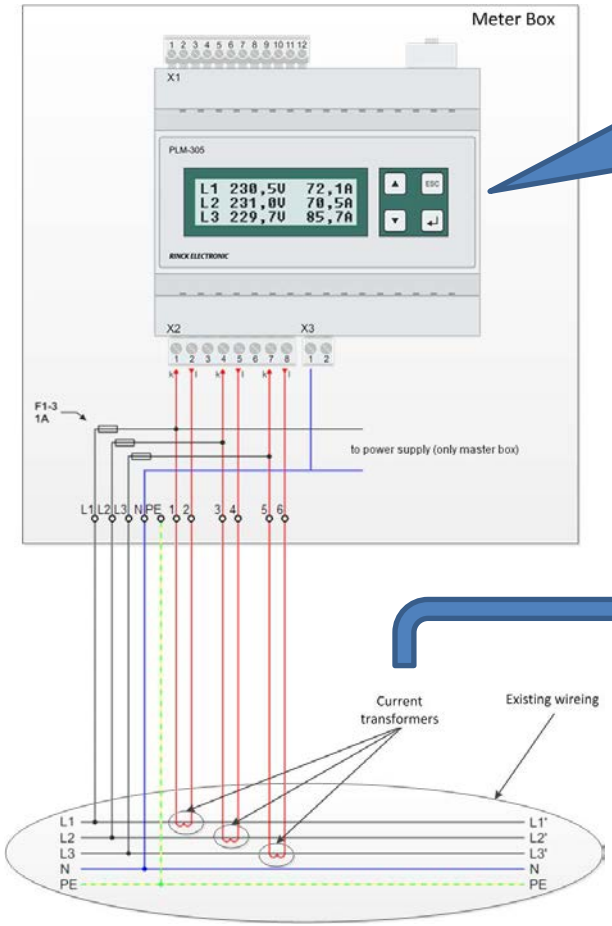

Power meter with ModBus TCP/IP communication

Current transformers

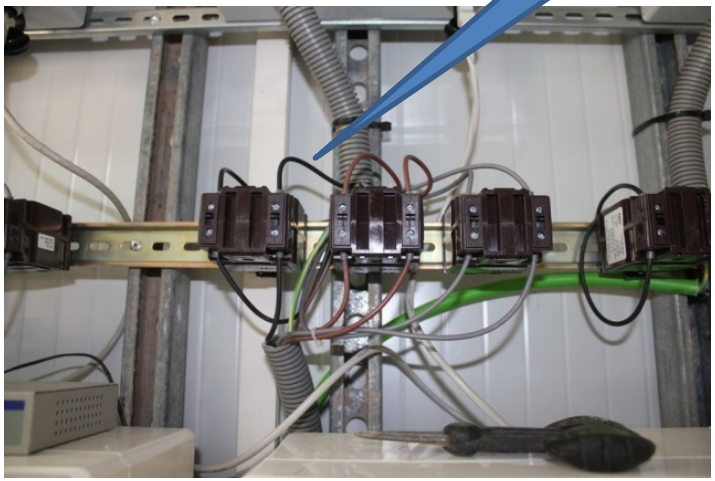

5. Prototype

Leader: FH Fraunhofer

- EMS

OpenMUC Data Acquisition Framework

A customized OpenMUC data management framework is used as a monitoring, logging and controlling system

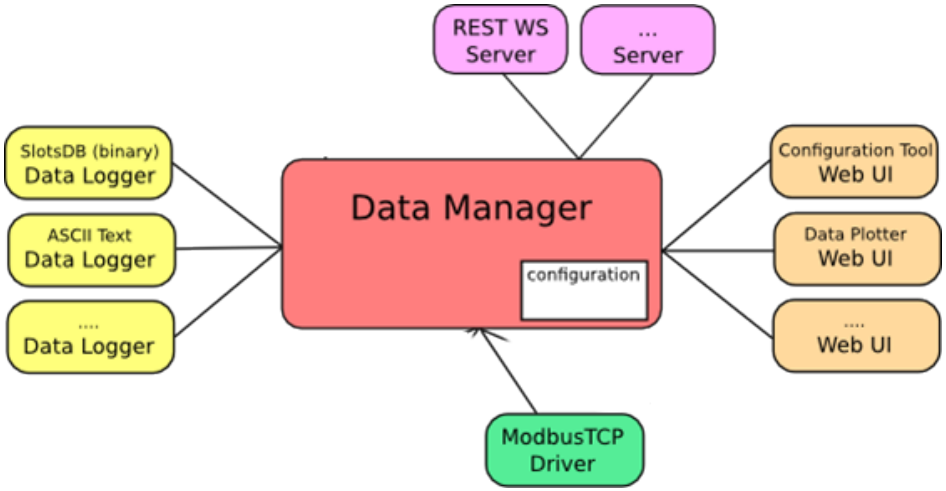

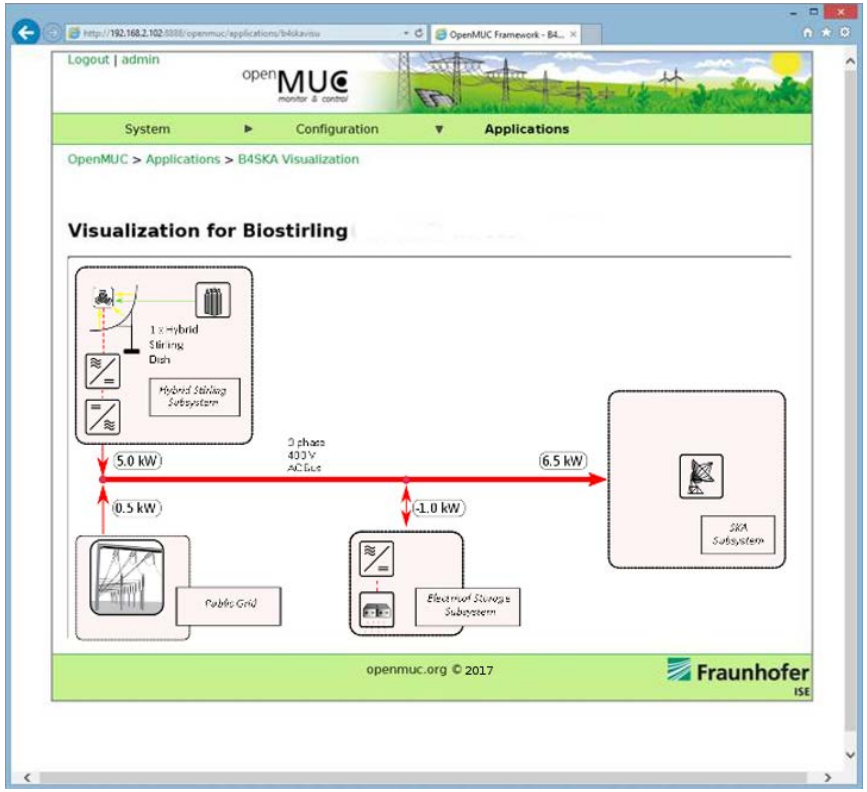

ENERGY STORAGE SYSTEM (WP4)

PRINCIPAL OBJECTIVE: Designing and sizing the Power Conversion Unit (Secondary Energy Storage System) for BIOSTIRLING-4SKA Platform.

TECHNICAL OBJECTIVES:

1) To assure electric energy supply to SKA Demonstrator (24/7).
2) If the grid is isolated the PCU acts as a grid stabilizer. Variations of frequency and grid voltage will occur.

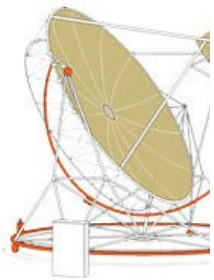

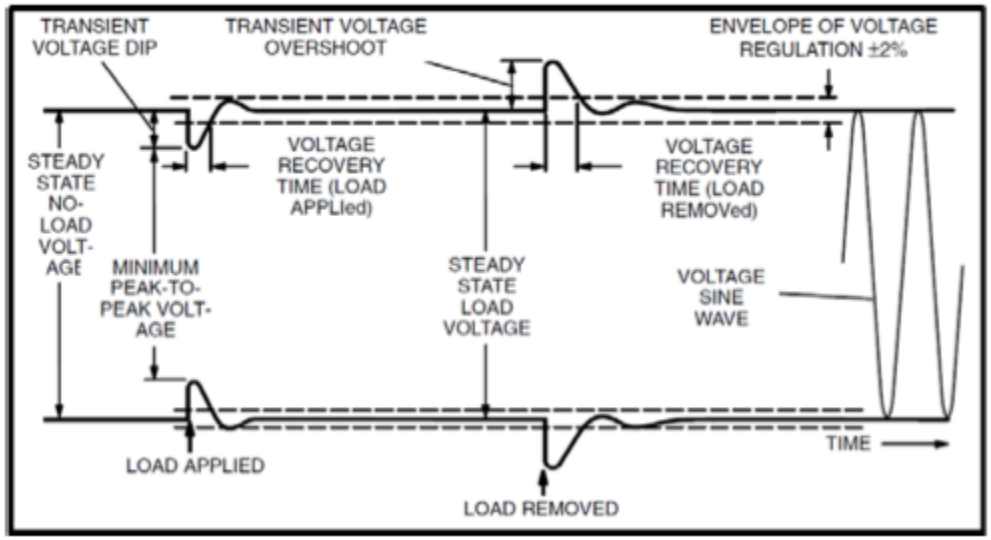

ENERGY STORAGE SYSTEM

UNIT COST COMPARISSON

H_2 Technology

Item	Unit Cost
Fuel Cell	4 k€/kWe
Hydrogen Storage system (pressurized @ 30 bar)	1 k€/Nm^3 H_2
Electrolyzer (alkaline technology)	2 k€/kWe
DC/AC inverter	600 €/kWe
AC/DC converter	600 €/KWe
Batteries set (Li-ion technology)	5 k€/KWhe
Engineering and control system	100 k€
Auxiliaries	10 k€

	Cost
Batteries s	Whe
DC/AC co	kWe
Engineeri	k€

5. Prototype

Leader: CGY CLEANERGY

- Stirling Engine. Design

The final design consists of 48 wickless thermosyphons oriented in two concentric circles, enabling both a tubular sun receiver and a radial gas flow through the pipes. The design included the development of a high temperature thermosyphon capable of using two different heat sources. The geometrical and thermal challenges are mainly linked to the small heat transfer contact area between the thermosyphons condenser and the attached working gas channels.

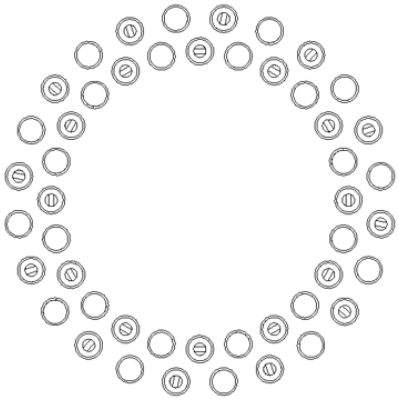

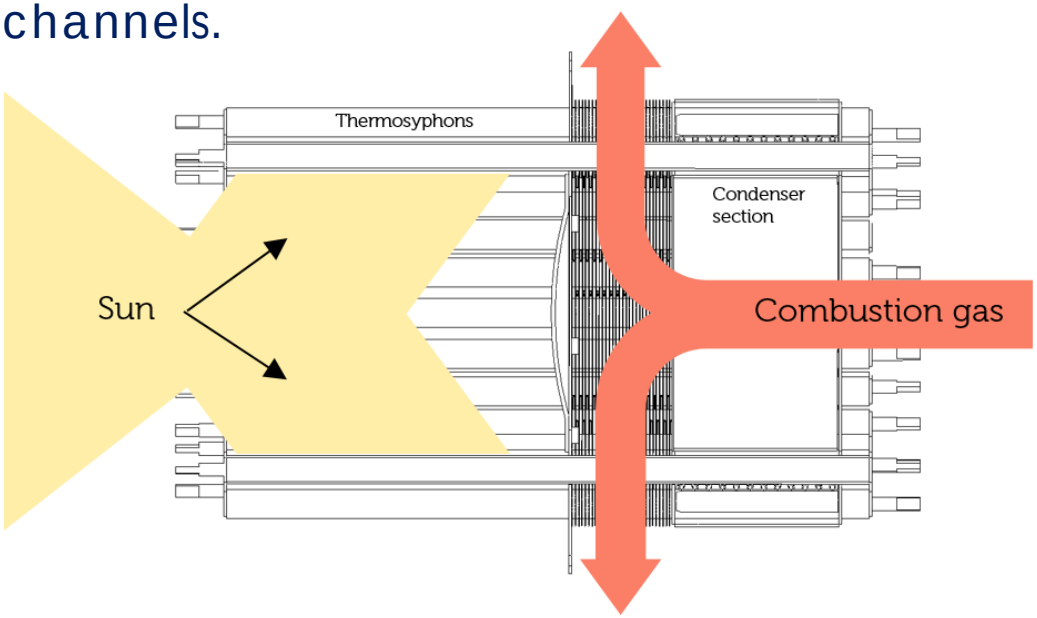

5. Prototype

Leader: CGY

- Stirling Engine. Built

5. Prototype

Leader: CGY

- Stirling Engine. Test Results
  - The first hybrid receiver prototype was tested successfully on Cleanergy's SunBox engine in combustion only mode, generating a maximum electrical power output of 7.7kW with an electrical efficiency of 17% in January 2016.
  - Different heating powers were evaluated at an inclination of 15° and all results indicated that the developed receiver will also perform well when heated only from the sun or from both sun and gas simultaneously.
  - At the first test run of the unit in hybrid mode in Moura April 25th, the output power increased from combustion mode at 1,5 kW to hybrid mode producing 3 kW proving that the concept is working.

5. Prototype

Leader: CGY

- Stirling Engine. Test Results

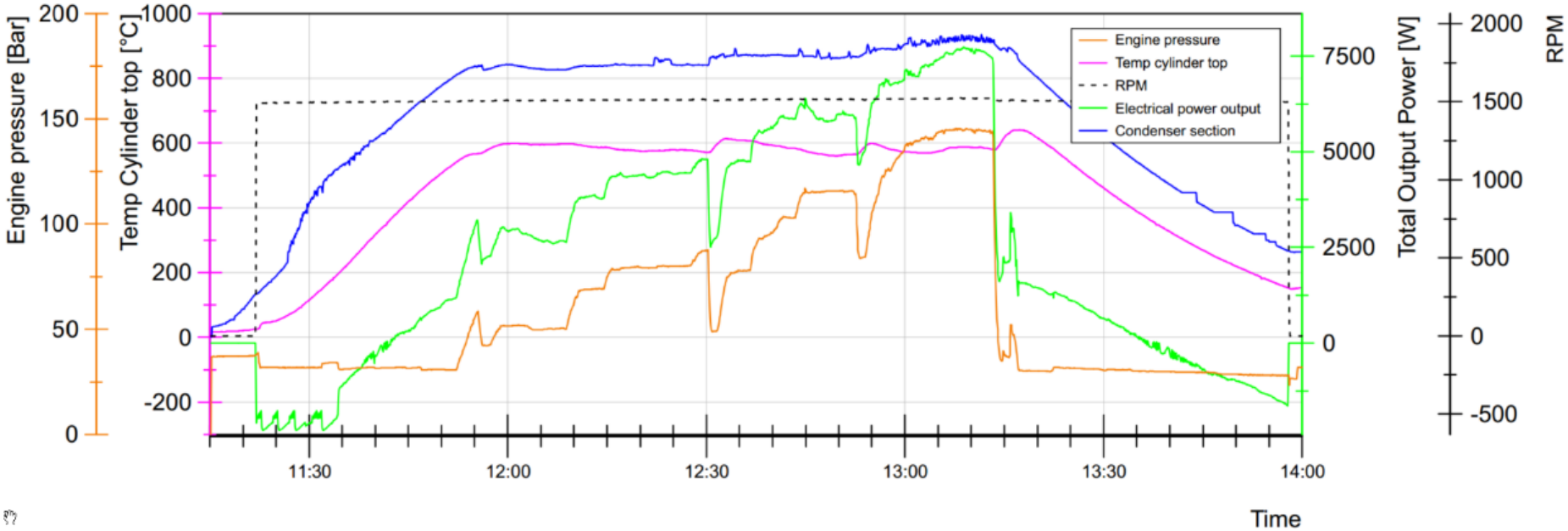

5. Prototype

Leader: CGY

- Stirling Engine. Hybrid engine on dish

5. Prototype

Leader: CGY

- Stirling Engine. Engine test run in hybrid mode, April 25th

5. And SKA is :

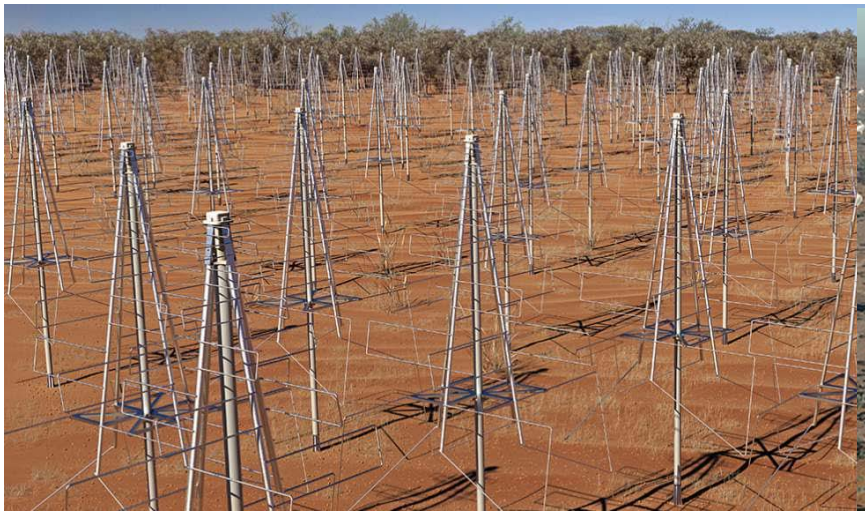

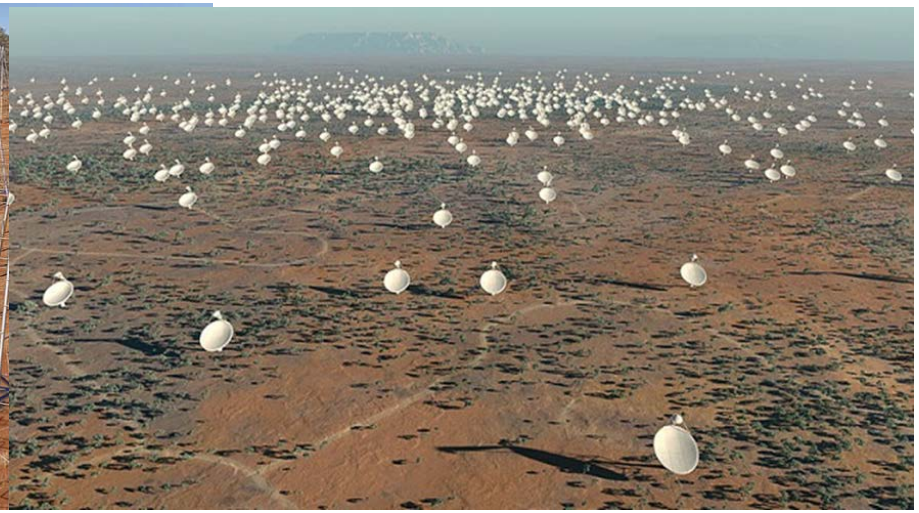

	SKA1_LOW (Australia)	SKA1_MID (South Africa)
Sensors type	130 000 dipoles	197 Dishes (including 64 MeerKAT)
Frequency range	50-350 MHz	0.45-15 GHz (B1,2, B5)
Collecting Area	0.4 Km^2	32 $000m^2$
Max baseline	65 Km (between stations)	150 Km
Raw Data Output	157 Terabyte /sec 0.49 Zettabyte/year	3.9 Terabyte/sec 122 Exabyte/year
Science Archive	0.4 Petabyte/day (128 Petabyte/year)	3 Petabyte /day (1.1 Exabyte/year)

5. Prototype

Leader: IT-ASTRON

- SKA

The SKA1: 3 sites

South Africa
Australia
SKA HQ

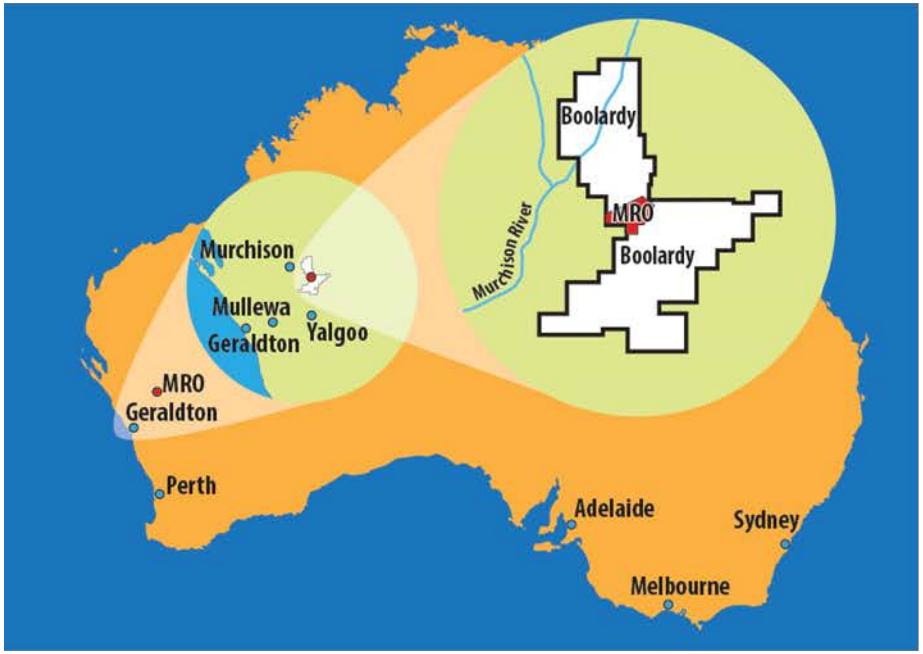

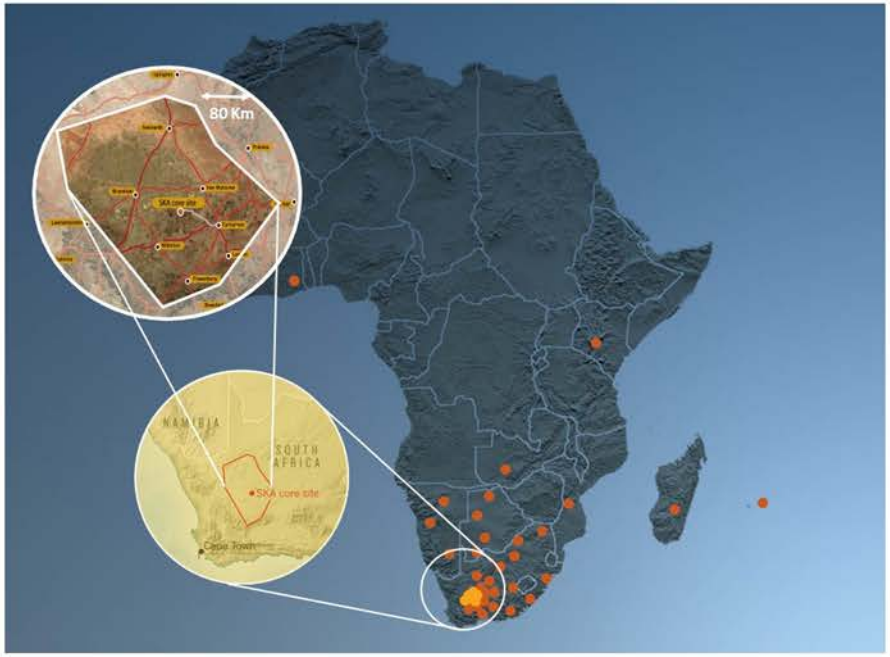

5. Prototype

Leader: IT-ASTRON

- SKA Power Estimates – General Analysis

SKA Phase 1&2	South Africa	Australia
Sparse Arrays		3.36 MW
Mid Dishes	2.5MW	
On-site Computing	4.7MW	1.32MW
Totals/site	5.7MW	4.8MW
SKA Phase2 incl. Dense Arrays	>40MW (SKA Phase 2 configuration not known yet)	
Off-site Computing	~20-40MW (SKA Phase 2 configuration not known yet)	

BIOSTIRLING-4SKA

BioStirling-4ska

Leader: IT-ASTRON

Improvement in the efficiency and reduction of costs of solar dish systems, with specific application as renewable energy option for the SKA telescope.

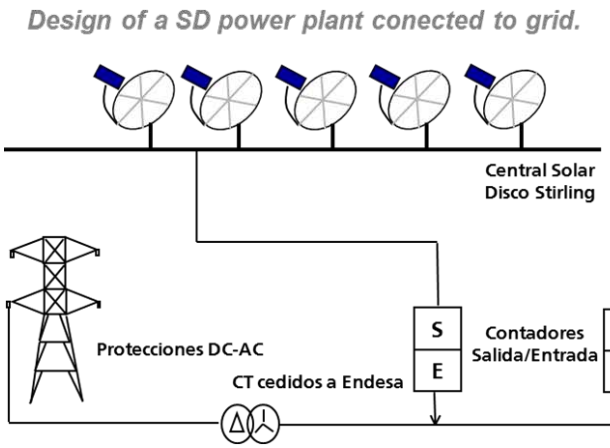

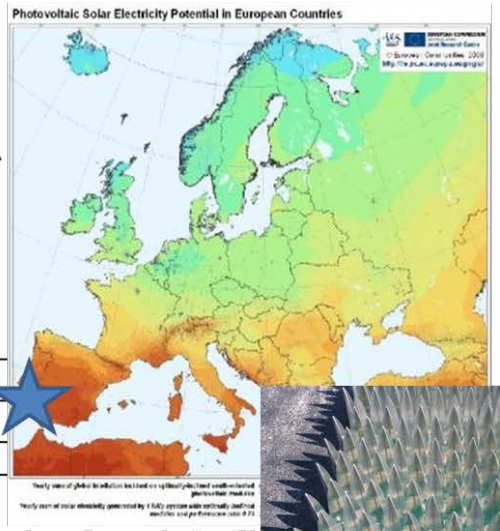

Source: European Comittee, IES-
Sustainability Joint Research Cer

A Big Thank to : Nuno Pereira, IPB
Enabling RFI Testing

IPBeja

5. Prototype

Leader: CSIC

BioStirling-4ska

Leader: IT-ASTRON

5. Prototype

- SKA Integration

5. Prototype

- AAs EMC/RFI testing:

A Big Thank to : Nuno Pereira, Enabling RFI Testing

IPBeja

BIOSTIRLING-4SKA

INDEX

6. Results

KPIs		Target Values
KPI-1	Reduce the total mirror facet slope deviation	< 1.5 mrad
KPI-2	Reduce the total system deviation, including also the environmental impact	< 2.5 mrad
KPI-3	Increase the reflectivity of the mirrors	↑ 0.5 %
KPI-4	Increase the availability of the syngas burner	> 98 %
KPI-5	Decrease the reduction in the efficiency of the fuel cell after 500hours of continuous operation.	> 2 % < 5 %

KPIs		Target Values (2016)
KPI-1	General (quasi static operation) frequency stability within a defined tolerance range	48Hz – 54Hz (SMA Island System)
KPI-2	General (quasi static operation) voltage stability within a defined tolerance range	European grid: 230V +-10%
KPI-3	Dynamic voltage and frequency drop relative to the reference value (50 Hz and 400 V)	50Hz +- 0,2Hz and 230V +-10%
KPI-4	Grid efficiency (total energy output ↔ total energy input)	Efficiency: > 70 %

5. Prototype

Leader: CSIC

- A 52' TV documentary production

Credits:

CSIC – Direction/Script/Editing
LANIAKEA M&C – Production/Script/Editing
LIPSSYNC FILM (filming/editing)
& VTH Producciones (filming Moura)
11 partners, 5 countries, 15 experts, 10 days
Energy + Astronomy + Technology
Six chapters:

- The energy problem
- The Sun energy
- Concentrating the Sun
- Biostirling: A new dish engine generation
- Energy for SKA Demonstrator
- The end

Mixing interviews, animations, resources, etc.
Distribution – TV & digital platforms






Thank you all for your attention

BioStirling-4ska