SNOOPI

Smart Network Control with Coordinated PV Infeed

Sabrina Hempel | 24.10.2017

s.hempel@energynautics.com
Energynautics GmbH, Darmstadt, Germany
www.energynautics.com

IN COLLABORATION WITH

Outline

- Project Background
- Voltage Regulation Tool
- Testing Environments
- Simulation Results
- Conclusion and Outlook

Project Background

Integration of PV plants into the distribution grid

- Increasing amount of PV plants in the distribution grid
  - ➢ Voltage rise along the feeder at times with high PV infeed
  - ➢ Amount of PV plants is limited because of the permitted voltage deviation of ±10%
- By providing reactive power, PV and battery inverter can reduce the voltage

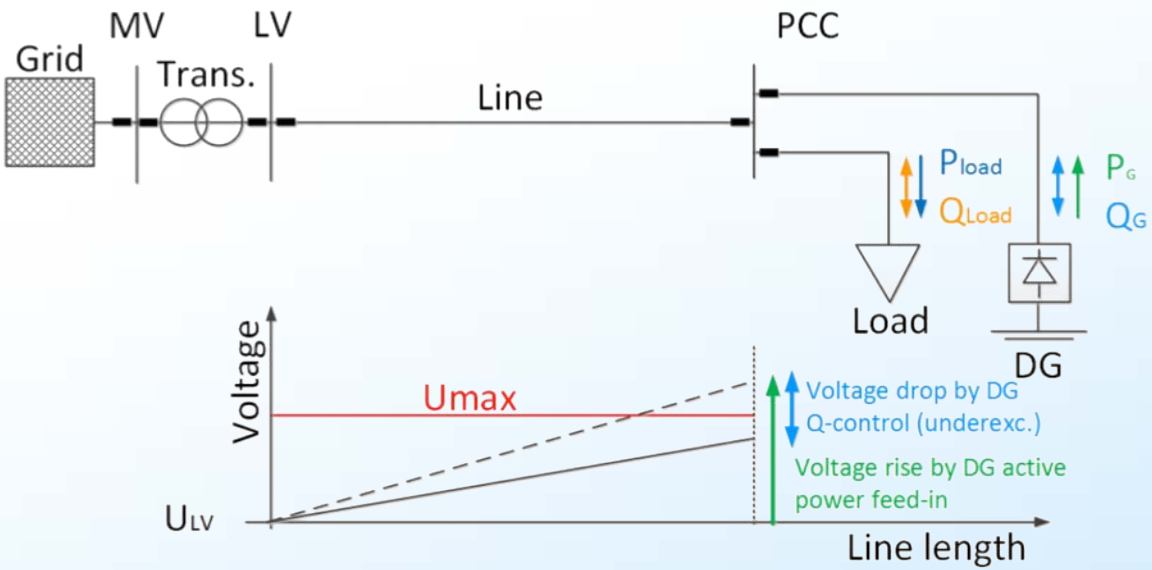

SOURCE: M. Kraiczy, L. Al Fakhri, T. Stetz, and M. Braun, "Do It Locally: Local Voltage Support by Distributed Generation – A Management Summary," 2017

Project Background

Our Solution

- Development of a **SNOOPI-Box** to control PV and battery inverter in the distribution grid

SNOOPI

Smart Control: Contains a voltage regulation tool to control reactive power

Autonomous: Works independently without communicating with other boxes or devices

Transferable: Uses the SunSpec protocol to communicate with the inverter → Applicable to almost any PV or battery inverter

Project Partner

Project Partner

Energynautics GmbH, Germany

- Development of the simulation model and the regulation algorithm
- Project management

KTH Royal Institute of Technology, Sweden

- Development of the voltage regulation

EWR Netz GmbH, Germany

- Supply of grid and measurement data
- Field Test Area

Associated Partner

Fronius International GmbH, Austria

- Assists with the communication

Gefördert durch:

Bundesministerium für Wirtschaft und Technologie

aufgrund eines Beschlusses des Deutschen Bundestages

Project Phases

10/2015

09/2018

✓ **Phase 1**
- Identification of possible field test areas
- Development of simulation models

✓ **Phase 2**
- Development of the voltage regulation tool

✓ **Phase 3**
- Successful tests of the regulation tool in the simulation model

✓ **Phase 4**
- Successful tests of the regulation tool in the lab tests

(✓) **Phase 5**
- Selection of field test areas
- Installation of battery systems

Phase 6
- Successful tests of the regulation tool in the field test

Voltage Regulation Tool

Voltage Depended Reactive Power Control

- Reactive power setpoints are determined using an autonomously parameterized Q(U) characteristic curve

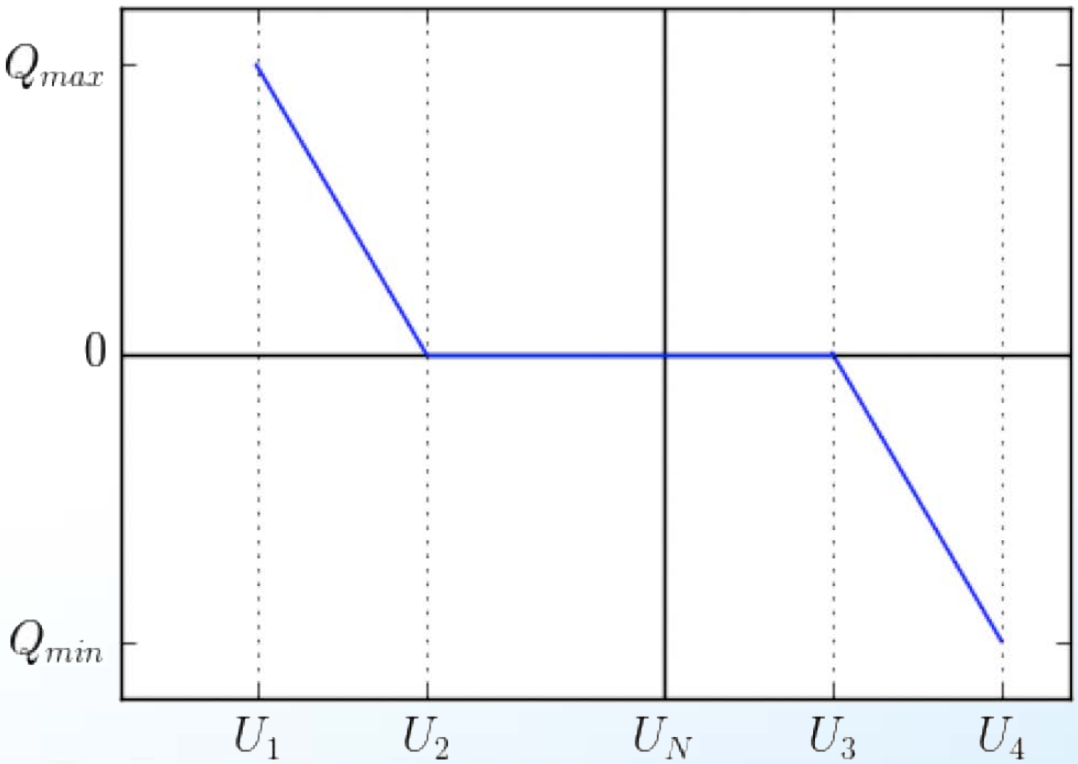

Parameter:

Q_{max}, Q_{min}: Max./ min. reactive power of the inverter

U_N: Nominal Voltage

U_{max}, U_{min}: Max./ min. measured voltage

Parameterization:

$U_4 = U_{max}$

$U_3 = U_N + 0.5 \cdot (U_{max} - U_N)$

$U_1 = U_{min}$

$U_2 = U_{\min} + 0.5 \cdot (U_{\max} - U_N)$

Voltage Regulation Tool

Coordinated Behaviour of all inverters

- The voltage at the beginning of the feeder is smaller than the voltage at the end of the feeder:

  Dependency of the starting point U_3 on U_{max} → all inverters will start to provide reactive power at the same time

- Reactive Power provided at the beginning of the feeder has a smaller influence on the voltage:

  The Q(U) curve is steeper if the maximum voltage is smaller → inverterts at the beginning of the feeder will have a steeper Q(U) curve

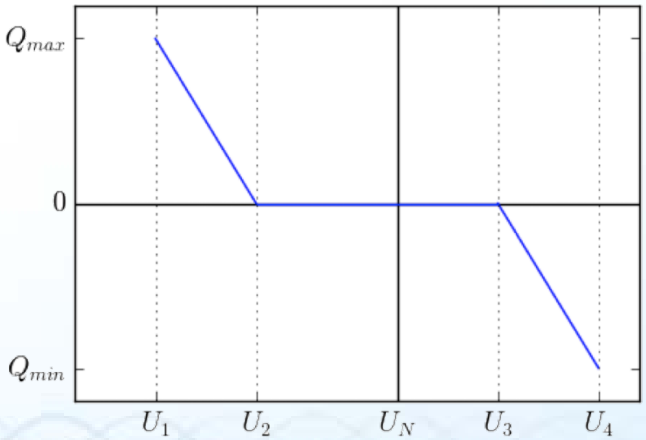

Parameterization:

$$U_4 = U_{max}\,;\, U_3 = U_N + 0.5 \cdot (U_{max} - U_N)$$

$$U_1 = U_{min}\,;\, U_2 = U_{\min} + 0.5 \cdot (U_{\max} - U_N)$$

Voltage Regulation Tool

energynautics
solutions for sustainable development

Change in the Grid Topology

- Grid Topology changed:
  - Inverter from the beginning of the feeder is now located at the end of the feeder
    → U_{max} is adjusted automatically by measuring the higher voltages
  - Inverter from the end of the feeder is now located at the beginning of the feeder
    → U_{max} will remain at its high value

- **Solution**: Determining the influence of the reactive power on the voltage
  - Periodical calibration to determine the influence:
    - different reactive power setpoints are passed to the inverter
    - The influence is determined by dividing the change of the voltage dU by the change of the reactive power dQ
  - Influence will change if the grid topoloy is changed → U_{max} will be determined newly

Simulations in DIgSILENT PowerFactory

```
        self.limit = True
    self.dU = uTarget - asset.Destimate

def q_setp(self, asset):
    '''
    Creates reactive power setpoint based on the expected voltage change. The goal is to keep the voltage between umin and umax
    while maintaining a steady voltage. If the reactive power is not enough to fulfill this job, active power will be used additionally.
    '''
    ### Missing: learn the influence of the other batteries -> how much did our estimation miss and reevaluate the setpoint ...
    self.calc_dU(asset)
    if self.limit:
        # if U is within the limit, dQ is max +-qdelta.
        dQ = max(min(1/asset.dUdQ*self.dU,self.qdelta),-self.qdelta)
    else:
        dQ = 1/asset.dUdQ*self.dU
    Qset = asset.Qset + dQ

    if self.allowP:
        if (Qset >= asset.Qmax) or (Qset <= asset.Qmin):
            self.activateP = True
        else:
            self.activateP = False
    return min(max(Qset,asset.Qmin),asset.Qmax)

def p_setp(self, asset,Qset):
    '''
    Creates active power setpoint based on the expected voltage change. The goal is to keep the voltage between umin and umax
    while maintaining a steady voltage. The active power should not be used, as long as the reactive power is capable of handling the voltage.
    '''
    dU = self.dU
    hour = self.getHour(asset)
    Pset = 0

    if self.activateP or asset.P_on:
        dUQ = asset.dUdQ*(Qset - asset.Q)
        uPred = asset.Destimate + dUQ
        asset.uPred = uPred
        if ((uPred > self.umax[asset.name]) or (uPred < self.umin)):
            dUP = dU-dUQ
            dP = 1/asset.dUdP * dUP
            Pset = asset.Pset + dP
            asset.P_on = True
        # prevent battery from switching to on/off in each timestep
        elif (asset.P_on and ((uPred > self.umax[asset.name]-0.01) or (uPred < self.umin+0.01))):
            Pset = asset.Pset
```

DIgSILENT PowerFactory

Active Power in kW
Reactive Power in kVar
Voltage in V

Active [kW] and
Reactive Power
Setpoints [kVar]

Python Interface for PowerFactory

Active Power in W
Reactive Power in Var
Voltage in V

Active [%] and
Reactive Power
Setpoints [%]

Control Algorithm (Python)

Lab Test

```
        self.limit = True
    self.dU = uTarget - asset.Destimate

def q_setp(self, asset):
    '''
    Creates reactive power setpoint based on the expected voltage change. The goal is to keep the voltage between umin and umax
    while maintaining a steady voltage. If the reactive power is not enough to fulfill this job, active power will be used additionally.
    '''
    ### Missing: learn the influence of the other batteries -> how much did our estimation miss and reevaluate the setpoint ...
    self.calc_dU(asset)
    if self.limit:
        # if U is within the limit, dQ is max +-qdelta.
        dQ = max(min(1/asset.dUdQ*self.dU,self.qdelta),-self.qdelta)
    else:
        dQ = 1/asset.dUdQ*self.dU
    Qset = asset.Qset + dQ

    if self.allowP:
        if (Qset >= asset.Qmax) or (Qset <= asset.Qmin):
            self.activateP = True
        else:
            self.activateP = False
    return min(max(Qset,asset.Qmin),asset.Qmax)

def p_setp(self, asset,Qset):
    '''
    Creates active power setpoint based on the expected voltage change. The goal is to keep the voltage between umin and umax
    while maintaining a steady voltage. The active power should not be used, as long as the reactive power is capable of handling the voltage.
    '''
    dU = self.dU
    hour = self.getHour(asset)
    Pset = 0

    if self.activateP or asset.P_on:
        dUQ = asset.dUdQ*(Qset - asset.Q)
        uPred = asset.Destimate + dUQ
        asset.uPred = uPred
        if ((uPred > self.umax[asset.name]) or (uPred < self.umin)):
            dUP = dU-dUQ
            dP = 1/asset.dUdP * dUP
            Pset = asset.Pset + dP
            asset.P_on = True
        # prevent battery from switching to on/off in each timestep
        elif (asset.P_on and ((uPred > self.umax[asset.name]-0.01) or (uPred < self.umin+0.01))):
```

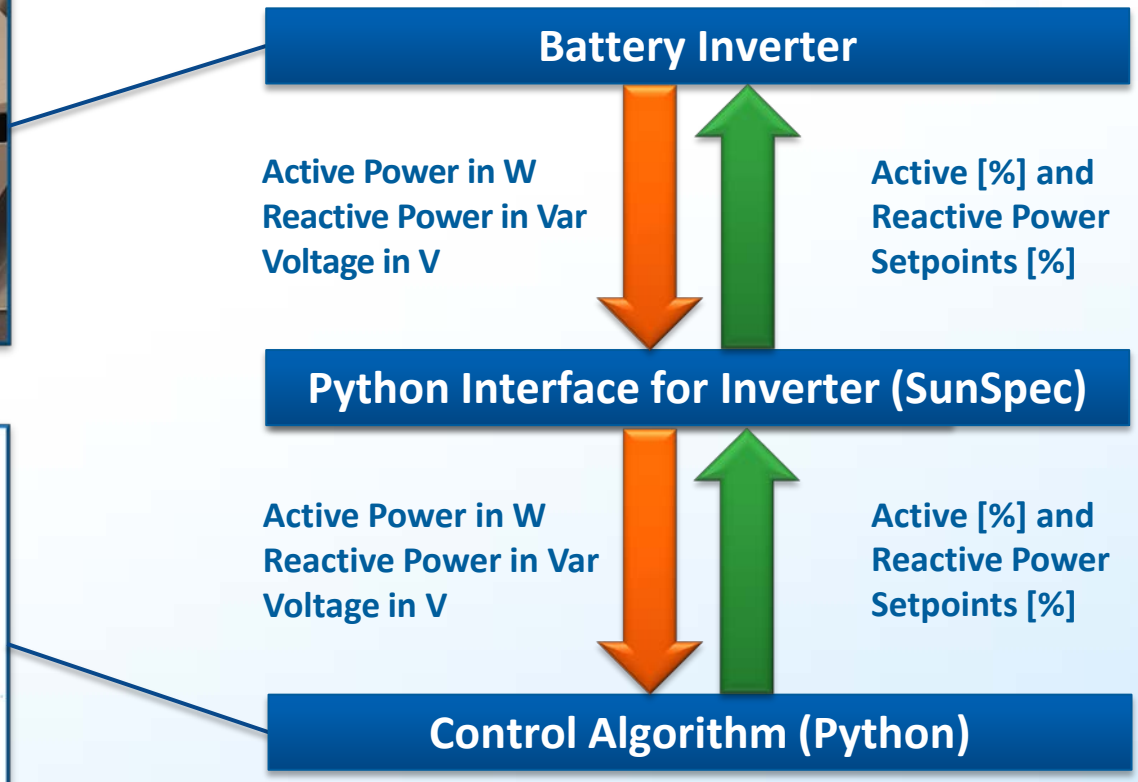

Field Test

- Installation of 7 battery systems equipped with the SNOOPI-Box in the field test area

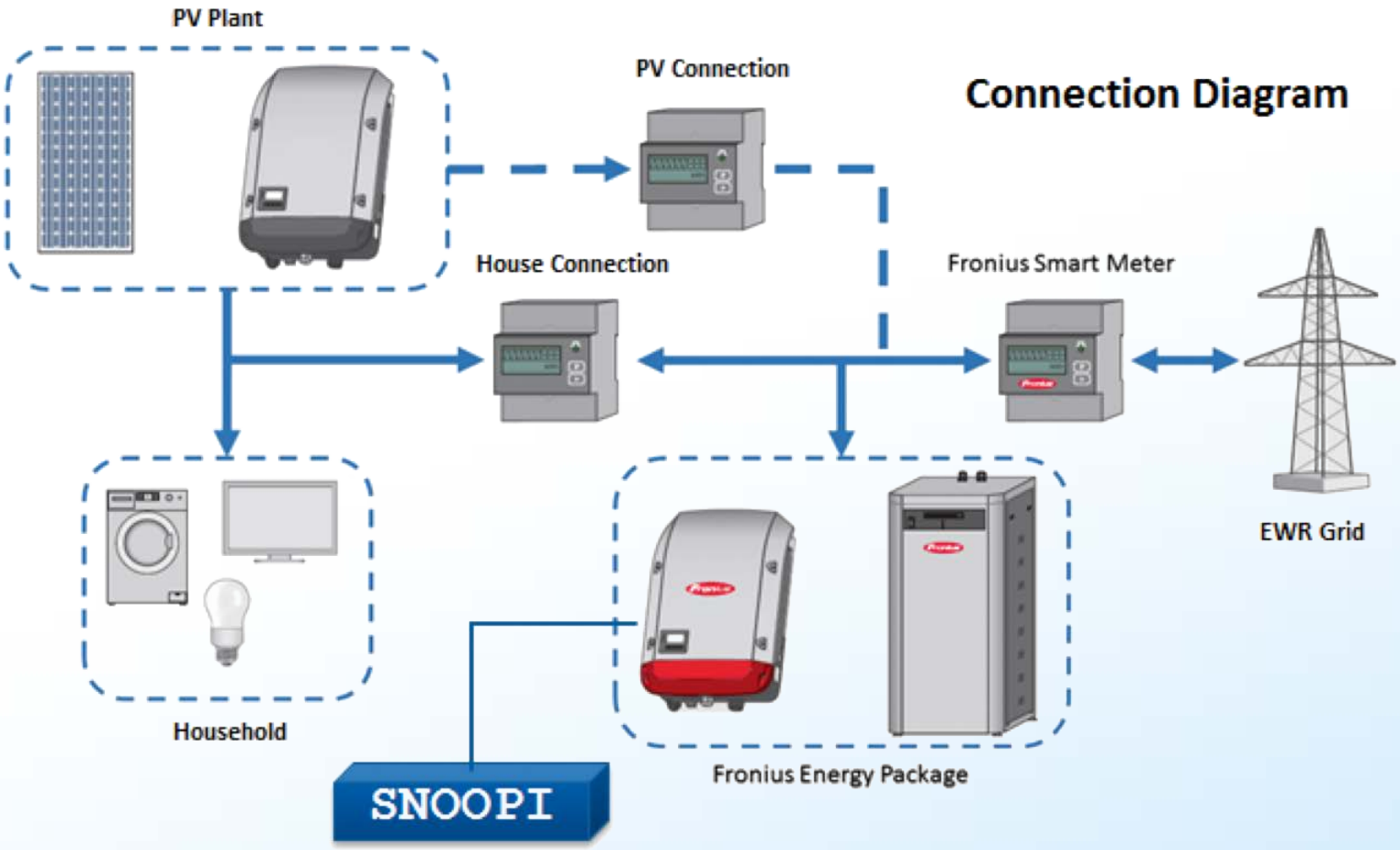

SOURCE: Fronius, Adjustment: Energynautics

Field Test Area

PQA: Power Quality Analyzer

PMU: Phasor Measurement Unit

Feeder with Voltages between 0.93 and 1.06 p.u.

Battery locations

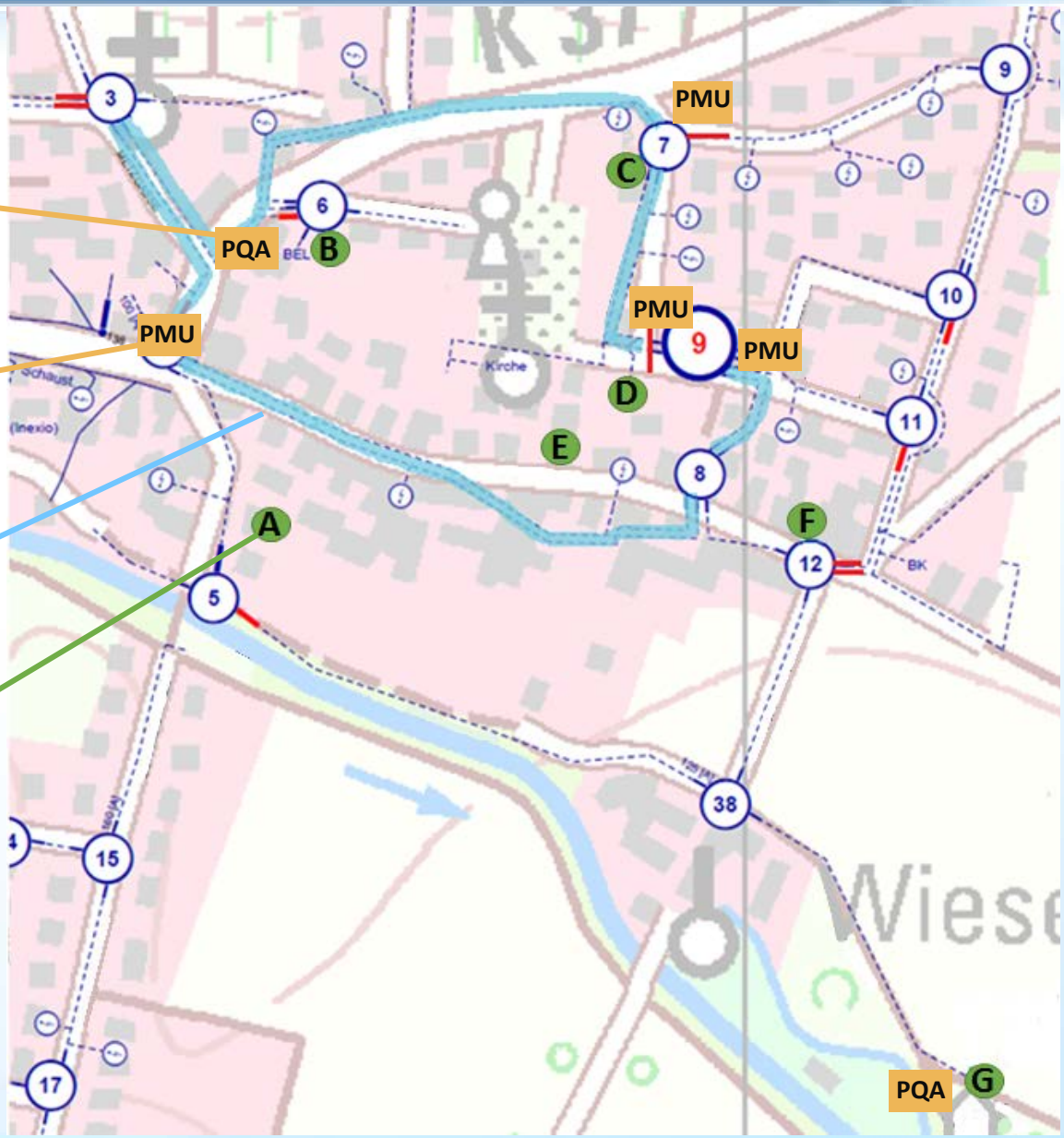

Field Test


snoopibox
smart network control with coordinated pv infeed
by energynautics

Simulation Results

Learning Behaviour

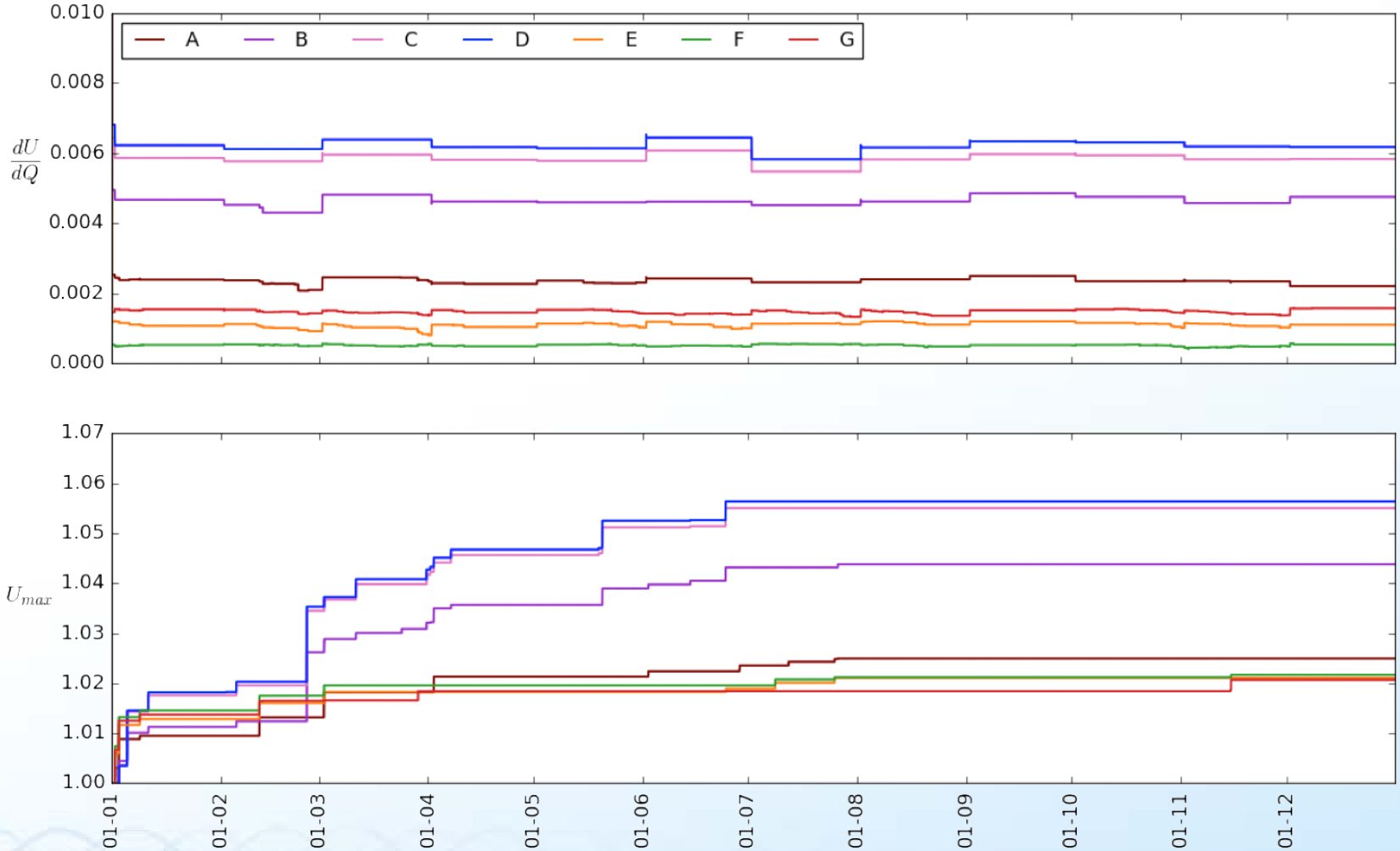

Simulation Results

Q(U) Characteristic Curve

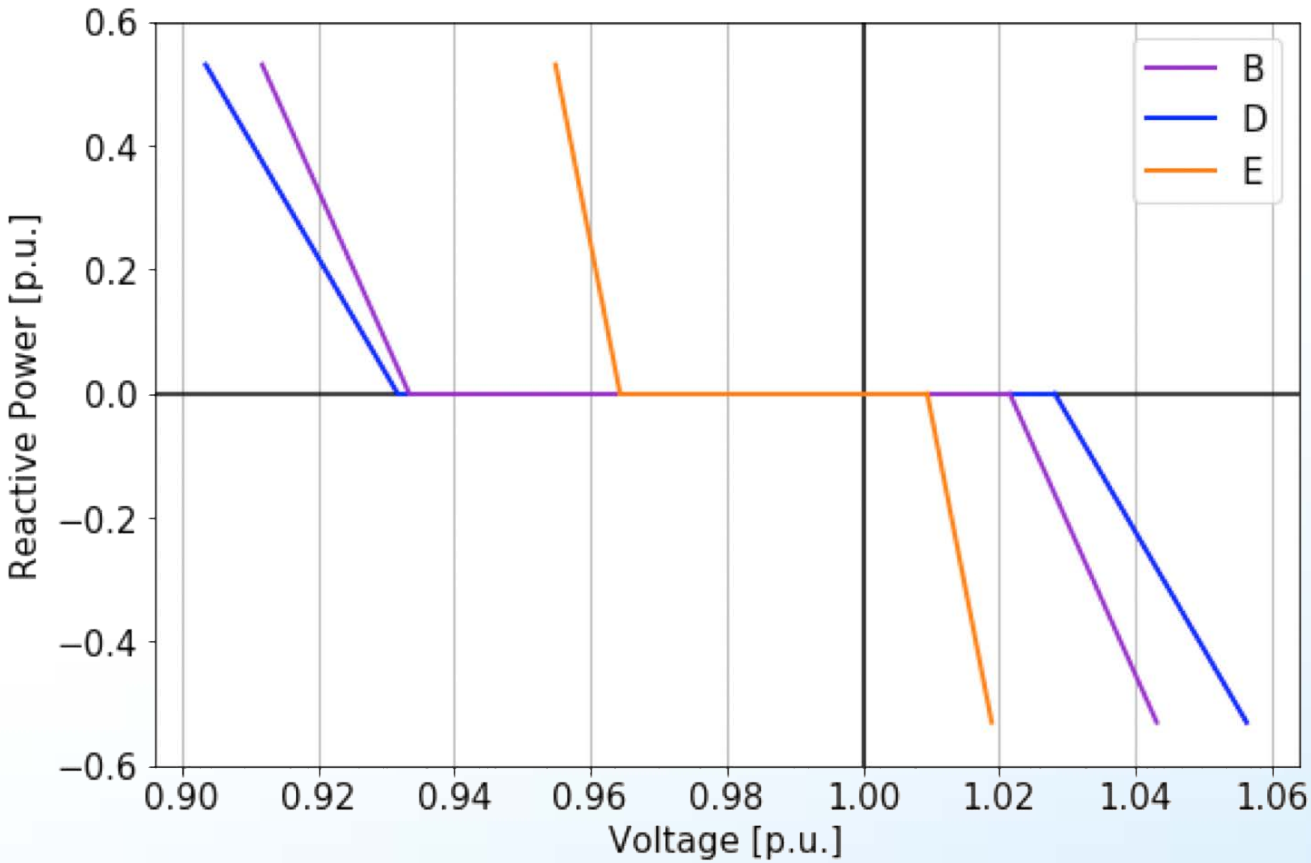

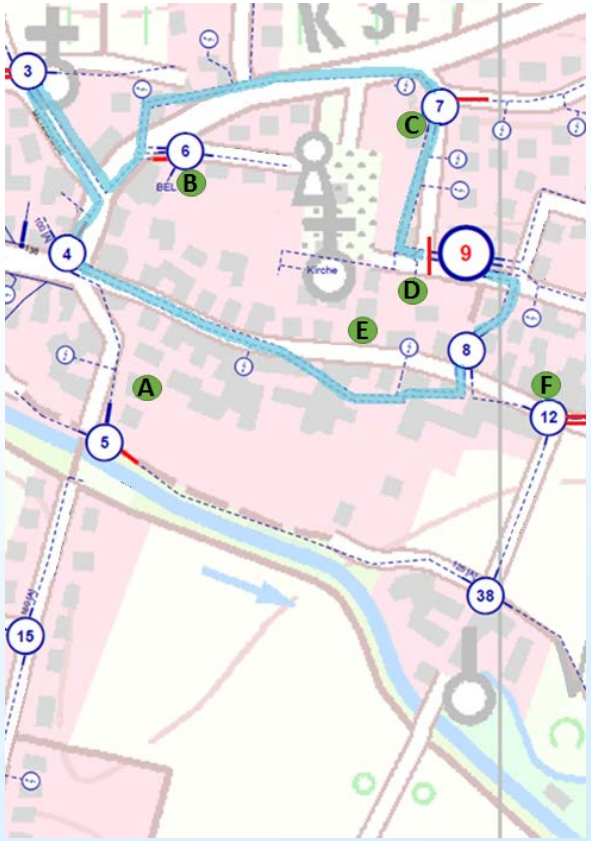

Simulation Results

Example Day

Simulation Results

Correlation

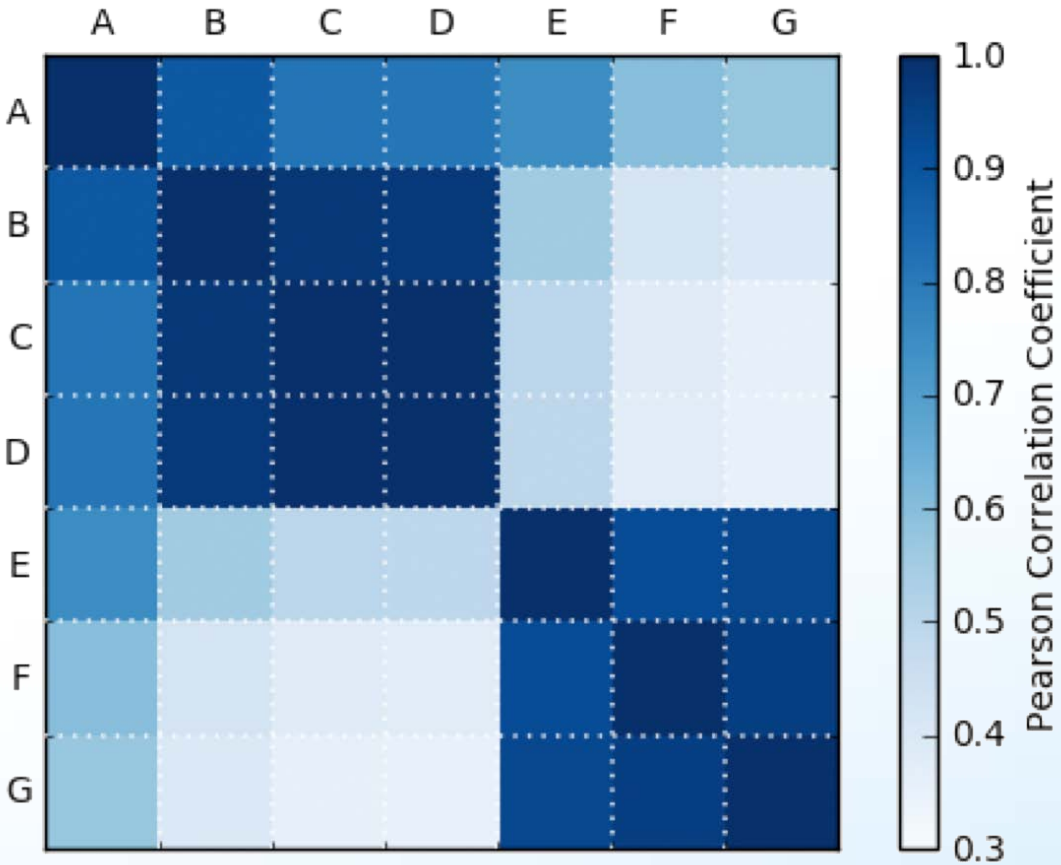

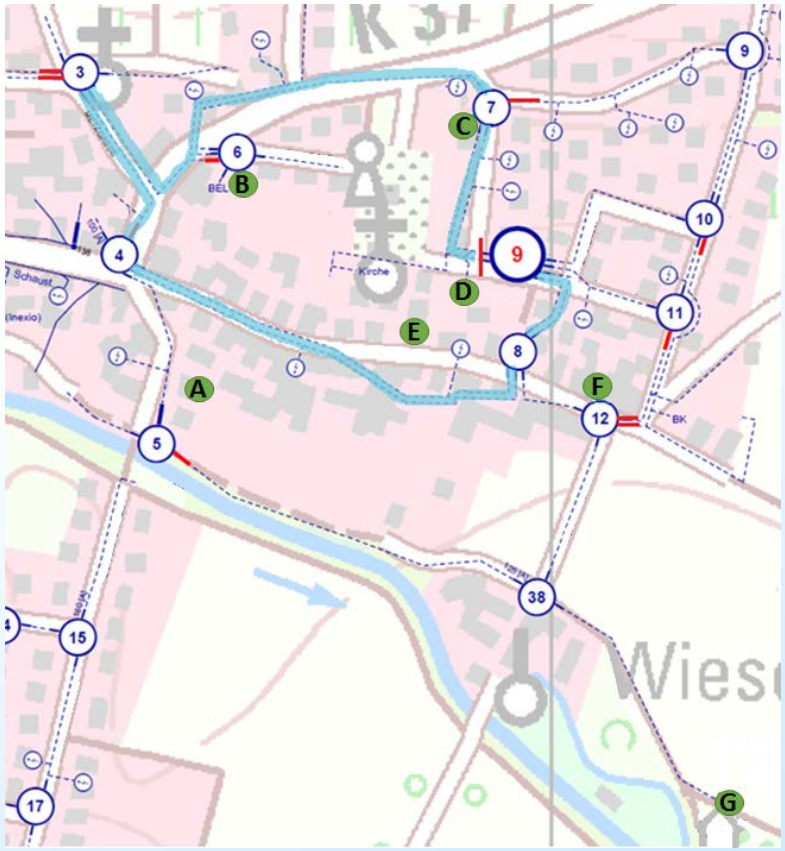

Simulation Results - Switching

Learning Behaviour

Simulation Results - Switching

Voltage and Reactive Power

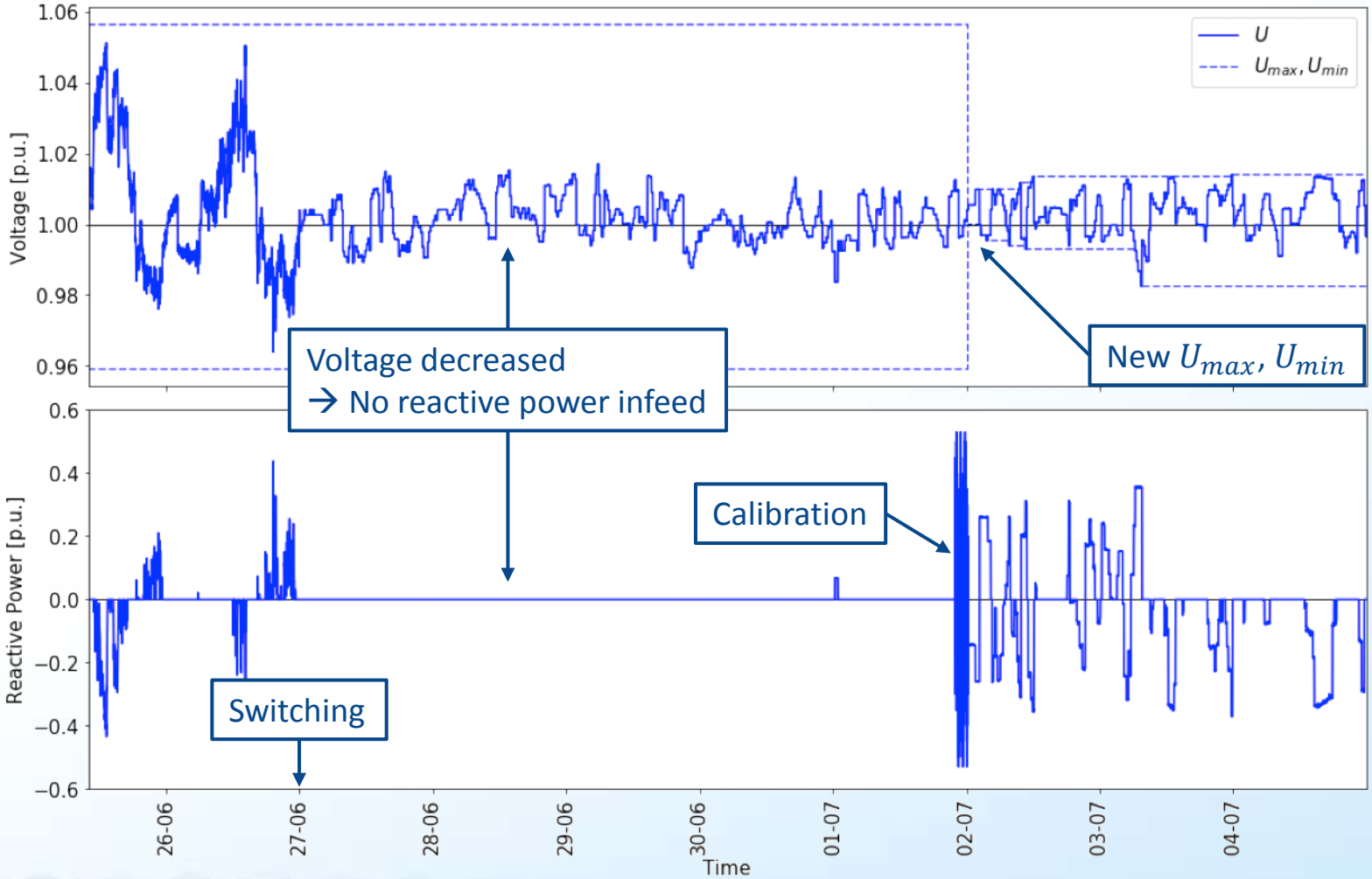

Conclusion and Outlook

energynautics
solutions for sustainable development

Conclusion

- By an autonomous parameterization of the Q(U) curve, the inverters in a distribution grid are coordinated and help to reduce the voltage to the same extend
- Advantage of a coordinate behaviour: Inverters placed at the beginning of a feeder also help to reduce the voltage although they don't measure high voltages

Outlook

- Field test has been started recently → evaluate field test results
- Include active power control: Cut the midday peak of the PV generation by charging the battery without having a major impact on the self consumption rate
- **Final outcome**: Device which reduces the voltage considerably by controlling reactive and active power without impairing the system operator and without the need of any presettings or reconfigurations.

THANK YOU FOR YOUR ATTENTION!

energynautics
solutions for sustainable development

Sabrina Hempel

s.hempel@energynautics.com
Energynautics GmbH, Darmstadt, Germany
www.energynautics.com